RECEIPT OF NEPHI CITY POLICY DOCUMENTS

Electrical Policy Documents

❒Overhead Residential Electric Service

❒Underground Residential Electric Service

❒Request for Electrical Service Information
(To be completed by contractor/engineer/architect and returned to Nephi City)
❒Electrical Standard Drawings

For inspection of electrical service construction and installation contact the Nephi City Power Department @ 435-623-0276. 24 hours prior notice is required for all inspections.

Natural Gas Policy Documents

❒Gas Service Requirements

❒Request for Installation of Residential Gas Service
(To be completed by mechanical contractor and returned to Nephi City)
❒Application for Residential Gas Service
(To be completed by contractor and returned to Nephi City)
❒Natural Gas Standard Drawings

For inspection of natural gas service construction and installation contact the Nephi City Gas Department @ 435-623-4914. 24 hours prior notice is required for all inspections.

Sewer Lateral Policy Documents

❒Sewer Lateral Construction Standards

❒Sewer Lateral Standard Drawings

For inspection of sewer service construction and installation contact the Nephi City Sewer Department @ 435-623-2349. 24 hours prior notice is required for all inspections.

Curb, Gutter, Sidewalk, and Drive Approach Policy Documents

❒Curb, Gutter, Sidewalk and Drive Approach Requirements

❒ Curb, Gutter, Sidewalk and Drive Approach Standard Drawings

Inspection of curb, gutter, sidewalk, and drive approach is required before and after construction of all concrete construction. For inspections call the Nephi City Streets Department @ 435-623-0712.
24 hours prior notice is required for all inspections.

I,_____(Print Name)_____, hereby acknowledge that I have received the documents listed above, and I am responsible for complying with the information found within the Documents. If for any reason the installed work does not comply with the Nephi City standard drawings and specification, I agree to remove and re-install the work at no additional cost to Nephi City.

Signature_____ Date_____

NEPHI CITY POLICY
OVERHEAD RESIDENTIAL ELECTRIC SERVICE REQUIREMENTS

1. Installation is to be in accordance with the latest edition of the NATIONAL ELECTRIC CODE.

2. Meter base is to be located within 10 feet of the front (street side) of the structure.

3. Locate the meter base a minimum of 3 feet horizontally from gas meter.

4. Avoid meter base installations near bedroom or bathroom windows.

5. Never install meter base over window wells, steps, or other unsafe or inconvenient locations.

6. The center of the meter socket is to be a minimum of 4 feet, and a maximum of 6 feet, from finished grade immediately in front of meter base.

7. There must be minimum free working space of 12 inches to the sides and 36 inches in front of meter base.

8. Service mast is to be 2-inch Galvanized Rigid Conduit.

9. The service entrance conductors are to extend a minimum of 24 inches out of the weather head.

10. Temporary service will be disconnected at the time permanent service is connected.

If you have any questions about these requirements, contact the Nephi City Power Department @ 623-0276.

NEPHI CITY POWER

UNDERGROUND RESIDENTIAL ELECTRIC SERVICE REQUIREMENTS

Call Blue Stakes before digging.

It's the law.

811 or 1-800-662-4111

1. Installation is to be in accordance with the latest edition of the NATIONAL ELECTRIC CODE.

2. The meter base is to be located within 10 feet of the front (street side) of the structure.

3. Locate the meter base a minimum of 3 feet horizontally from the gas meter.

4. Never install meter base over window wells, steps, or other unsafe or inconvenient locations.

5. Center of meter socket is to be a minimum of 4 feet, and a maximum of 6 feet from finished grade immediately in front of meter base.

6. Avoid meter base installations near bedroom or bathroom windows.

7. There must be a minimum free working space of 12 inches to the sides and 36 inches in front of meter base.

8. Riser conduit is to be 2-inch GRC or IMC for services up to 200 amps. For larger services, contact the Power Department.

9. No bends are allowed in the conduit riser between the meter base and the underground elbow.

10. A sleeve is required where riser conduit passes thru pavement.

11. The riser conduit is to be firmly attached to the foundation above finished grade with two separate unistruts and 1/2 inch diameter concrete wedge anchors.

12. Elbows are to be regular-sweep GRC.

13. No more than 180 degrees of total bends are allowed.

Continued on back

14. Buried conduit is to be 2-inch schedule 40 PVC for services up to 200 amps. For larger services, contact the Power Department.

.

15. A pull line or poly rope capable of withstanding 400 pounds tensile strength is to be installed in the conduit after glue has dried.

16. The trench is to be a minimum of 30-inches from finished grade. Do <u>not</u> radius trench.

17. Dig trench to the edge of utility equipment where service will feed from and run conduit to this point. Leave trench open for 6 feet from utility equipment. Nephi City will install an elbow at this point. Contact the Power Department for point of entry into utility equipment.

18. Backfill material is to be free of rocks, stones, or objects larger than 2 inches in diameter.

19. Trench must be backfilled before service is connected.

20. Nephi City will provide and install cable and connect the service.

21. The temporary service will be disconnected when the permanent service is installed.

If you have questions about any of these requirements, contact the Nephi City Power Department @ 623-0276.

COMPLETE AND RETURN TO NEPHI CITY

Submit

Nephi City Power
21 East 100 North

Residential Request for Electrical Service from Architect/Engineer/Contractor

Phone (435) 623-0822
Fax (435) 623-5443

Please submit this form for each building to be served by Nephi City Power (NCP) for which you are preparing the electrical design specifications and plans. With this requested data, NCP will reply to you, giving the necessary electrical service information for you to complete your design. A digital copy of the site plan (showing proposed transformer location, meter base, and outside disconnect) and the electrical single line diagram is required. Please email to **Rust Finlinson at** rfinlinson@nephi.utah.gov or deliver to the address above. By signing this document, you hereby acknowledge that the information provided is accurate and take responsibility for this information up to and including financial cost for the replacement of NCP's equipment due to any inaccuracies contained herein.

Date:_____

Project Name:_____**Project Location:**_____

Your Name:_____

Company Name:_____

Address:_____
Street City State Zip Code

Contact Person:_____ Phone Number:_____

Email Address:_____ _____ sq.ft.

Anticipated date for permanent electric service:_____

Service Desired from Nephi City Power

Delivery Voltage: 240/120 1-Phase Customer Electric Panel Size:_____Amps Conductor Size:_____
Conduit Size:_____No. of Conduits: _____ Secondary Service: Underground_____Overhead _____
No. of meters needed: _____

_____
Authorized Signature

***To be completed by Nephi City Power Department**

The meter base for this installation is to be located on the_____side of the building.
Service will be provided from _____

NEPHI CITY POWER
Est. 1903

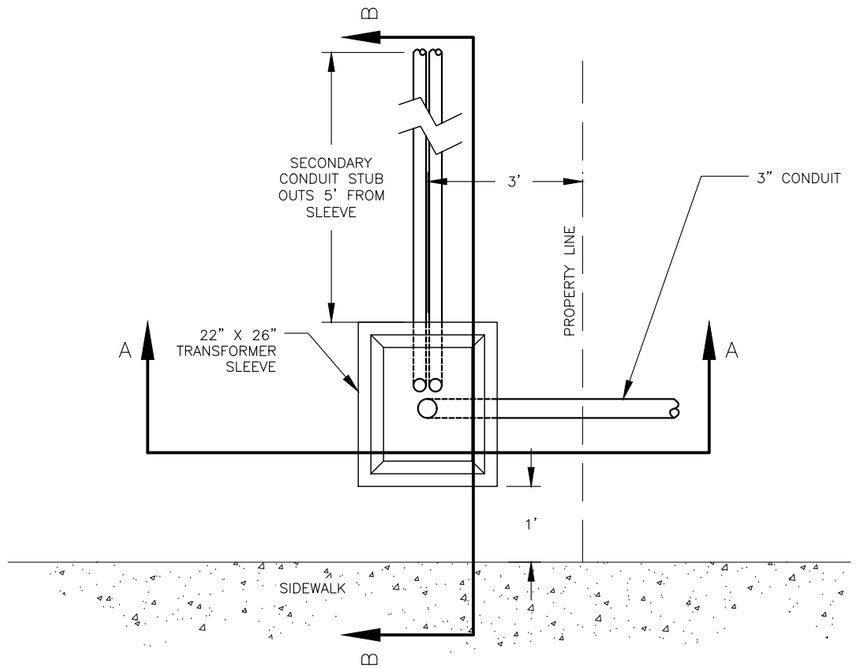

SECONDARY PEDESTAL - PLAN VIEW

NOT TO SCALE

NOTES:

1. ALL CONDUIT SHALL BE EMBEDDED IN 6" OF SAND BELOW THE CONDUIT AND 12" ABOVE THE CONDUIT
2. 3" CONDUIT ELBOWS TO BE 90° 24" SWEEPING RADIUS BENDS
3. 2" CONDUIT ELBOWS TO BE 90° 18" SWEEPING RADIUS BENDS
4. SECONDARY CONDUIT STUB OUTS SHALL BE 2"
5. SINGLE PHASE, PRIMARY AND SECONDARY CONDUIT SHALL BE 3"
6. ELBOWS TO BE RIGID STEEL WRAPPED IN ANTI-CORROSION TAPE OR SCHEDULE 40 PVC
7. CONDUIT AND TRANSFORMER SLEEVE MUST BE INSPECTED BY NEPHI CITY POWER PRIOR TO BACKFILLING, CONTRACTOR SHALL CALL 24 HOURS IN ADVANCE TO SCHEDULE AN INSPECTION

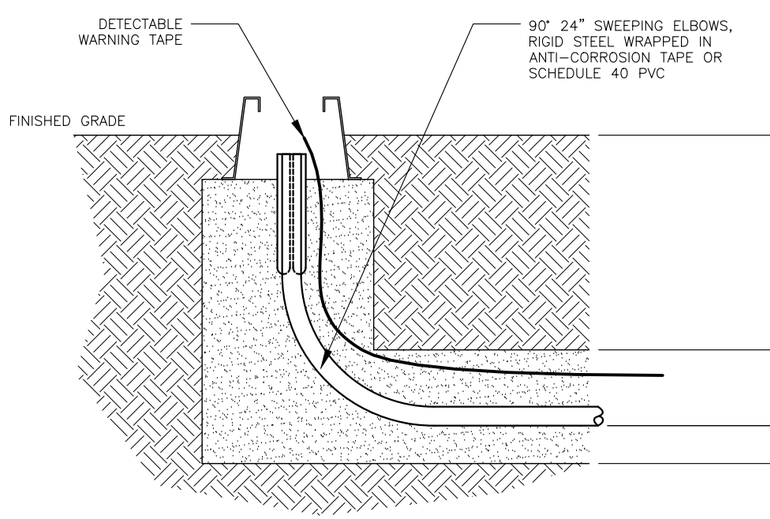

SECTION A-A

NOT TO SCALE

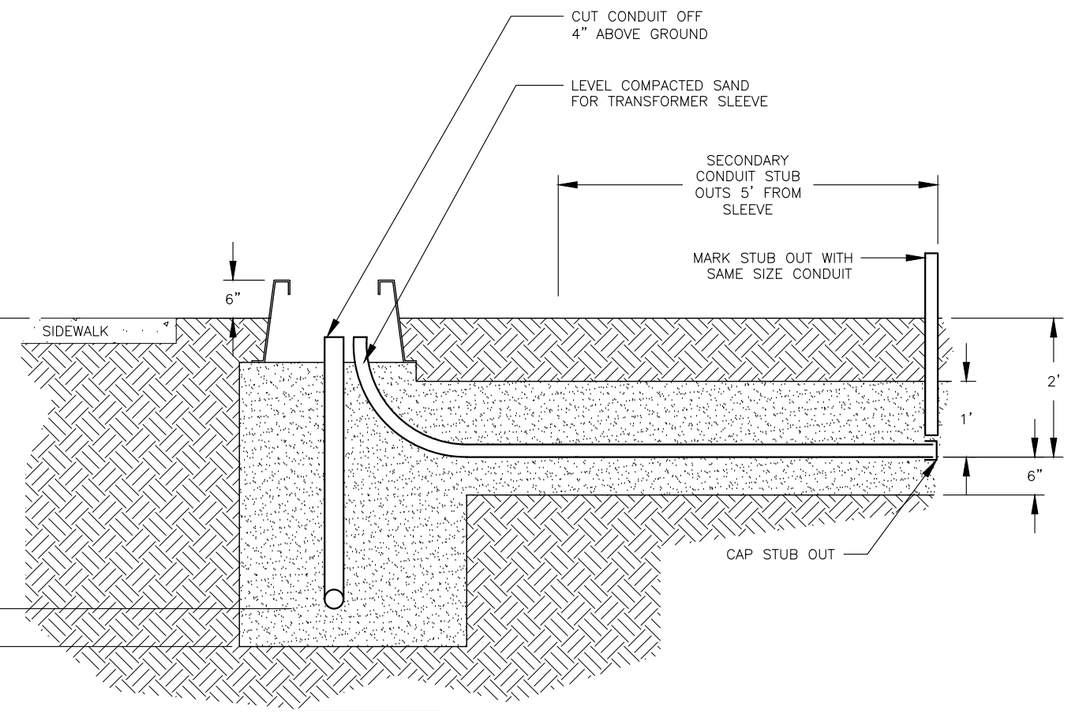

SECTION B-B

NOT TO SCALE

SHEET	ORIGINAL			
301	BY_____ DATE_____	SECONDARY PEDESTAL DETAIL	STANDARD DRAWING NEPHI CITY CORPORATION	NEPHI CITY 21 EAST 100 NORTH NEPHI, UTAH 84648
	REVISIONS			
	1 BY_____ DATE_____			
	2 BY_____ DATE_____			
	3 BY_____ DATE_____			

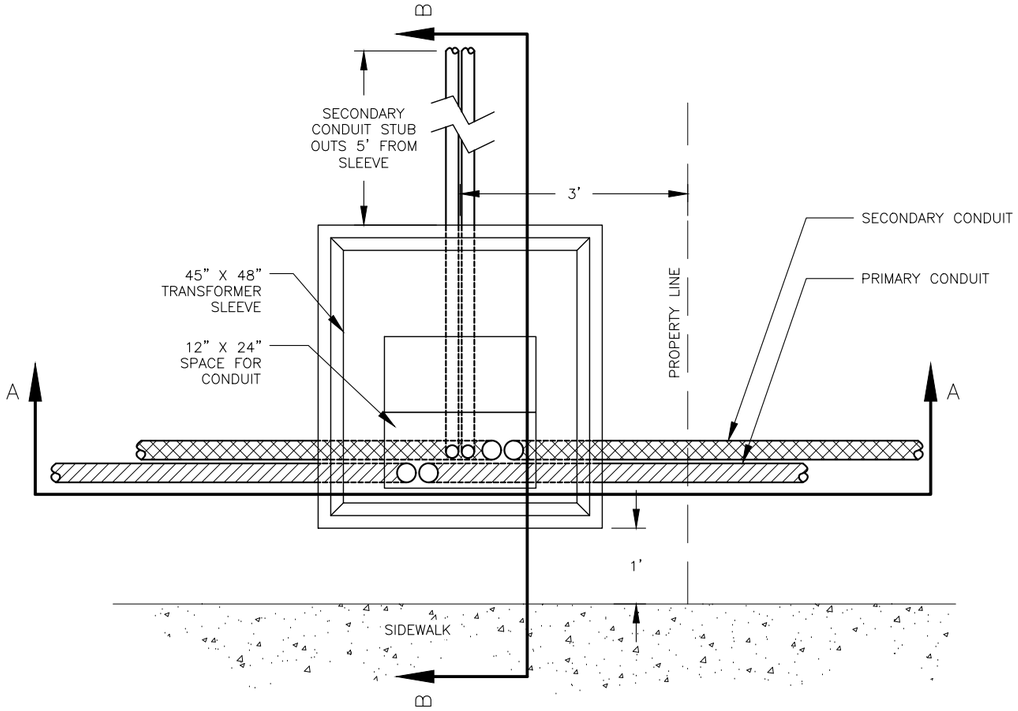

TRANSFORMER SLEEVE - PLAN VIEW

NOT TO SCALE

NOTES:

1. ALL CONDUIT SHALL BE EMBEDDED IN 6" OF SAND BELOW THE CONDUIT AND 12" ABOVE THE CONDUIT
2. 3" CONDUIT ELBOWS TO BE 90° 24" SWEEPING RADIUS BENDS
3. 2" CONDUIT ELBOWS TO BE 90° 18" SWEEPING RADIUS BENDS
4. SECONDARY CONDUIT STUB OUTS SHALL BE 2"
5. SINGLE PHASE, PRIMARY AND SECONDARY CONDUIT SHALL BE 3"
6. ELBOWS TO BE RIGID STEEL WRAPPED IN ANTI-CORROSION TAPE OR SCHEDULE 40 PVC
7. CONDUIT AND TRANSFORMER SLEEVE MUST BE INSPECTED BY NEPHI CITY POWER PRIOR TO BACKFILLING, CONTRACTOR SHALL CALL 24 HOURS IN ADVANCE TO SCHEDULE AN INSPECTION

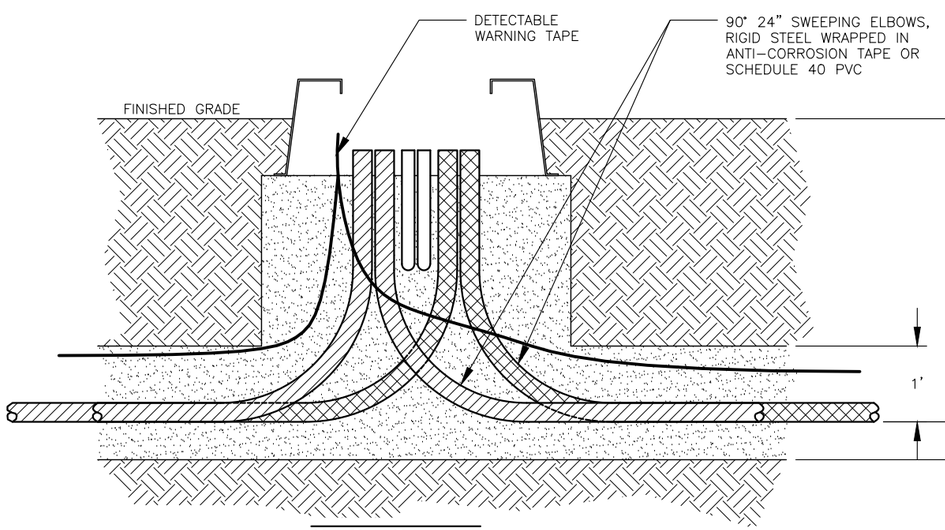

SECTION A-A

NOT TO SCALE

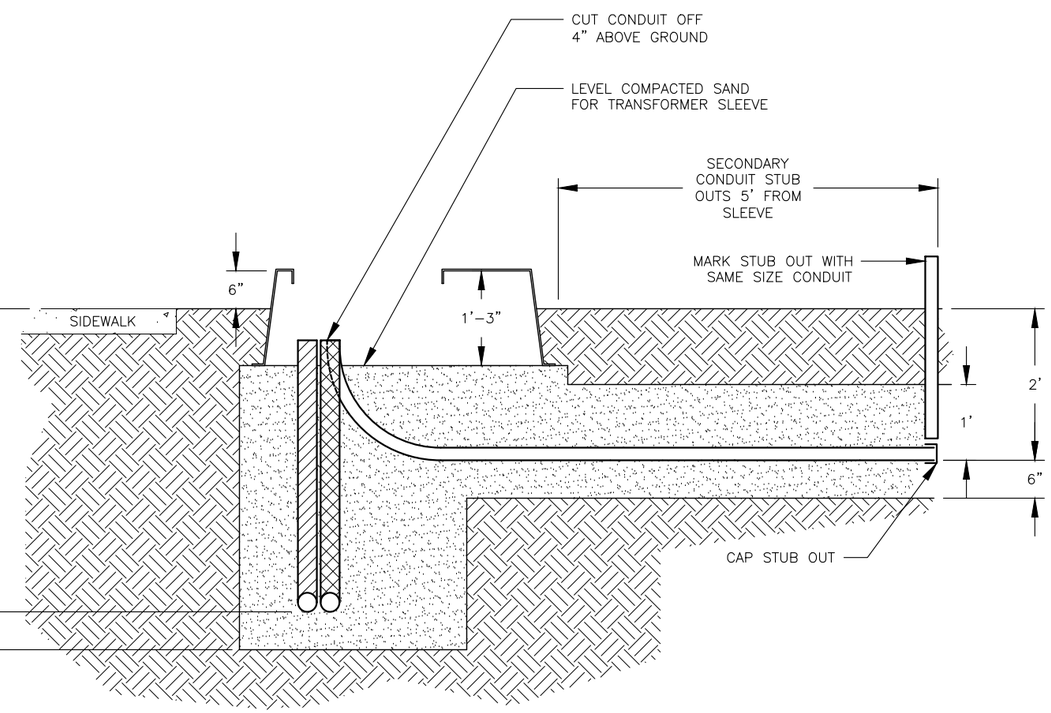

SECTION B-B

NOT TO SCALE

SHEET	ORIGINAL			
302	BY_____ DATE_____	SINGLE PHASE TRANSFORMER SLEEVE SITE DETAIL	STANDARD DRAWING NEPHI CITY CORPORATION	NEPHI CITY
	REVISIONS			
	1 BY_____ DATE_____			21 EAST 100 NORTH
	2 BY_____ DATE_____			NEPHI, UTAH 84648
	3 BY_____ DATE_____			

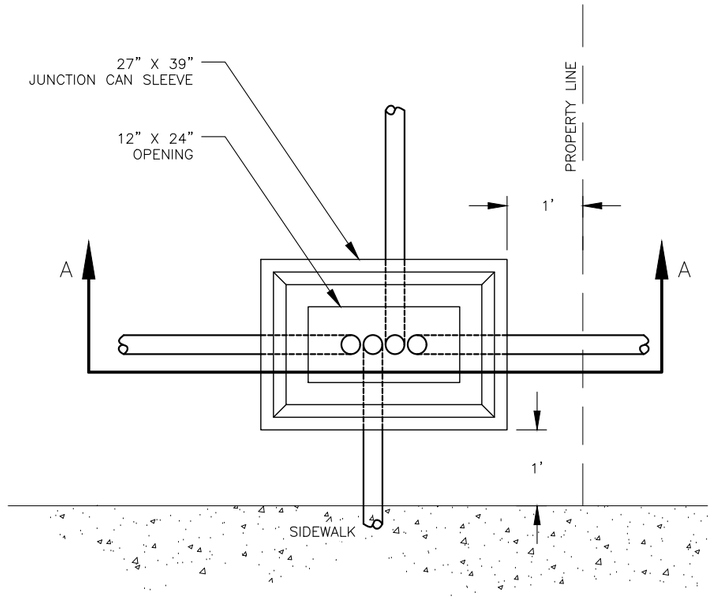

SINGLE PHASE JUNCTION - PLAN VIEW

NOT TO SCALE

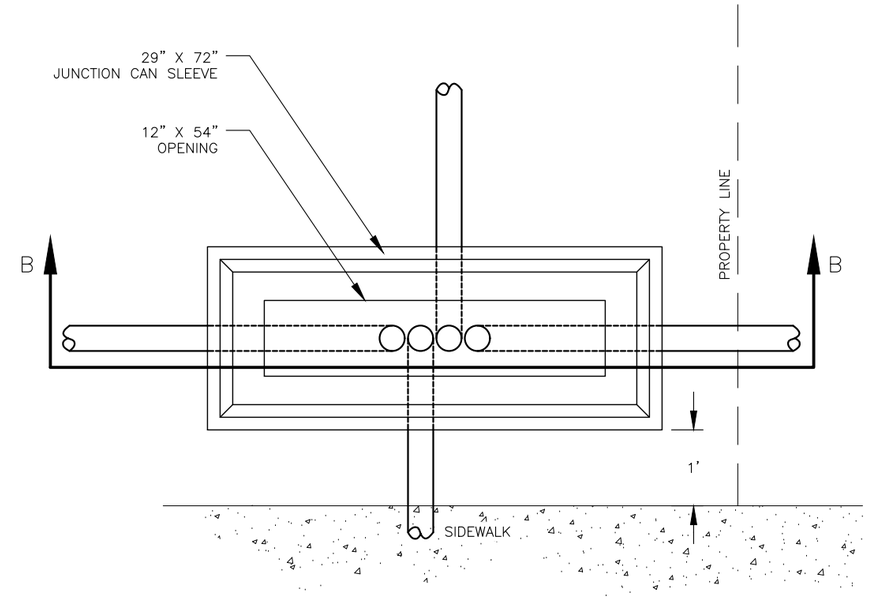

THREE PHASE JUNCTION - PLAN VIEW

NOT TO SCALE

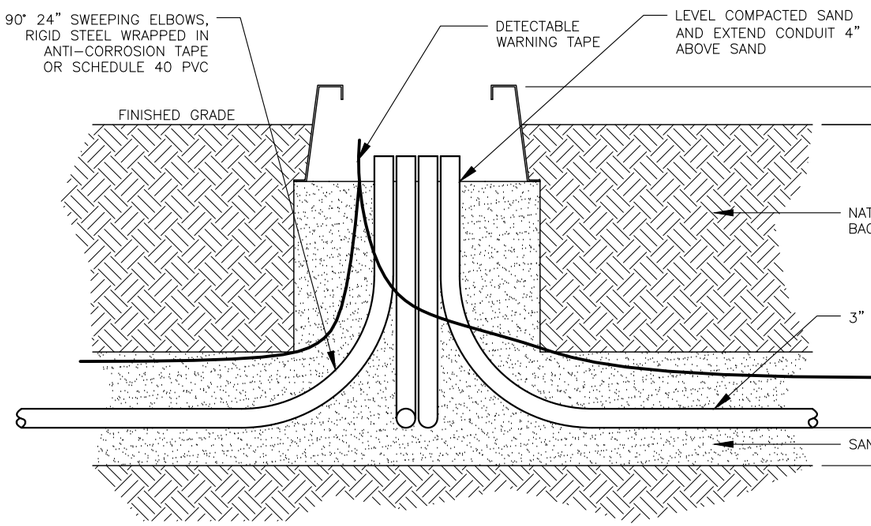

SINGLE PHASE JUNCTION - SECTION A-A

NOT TO SCALE

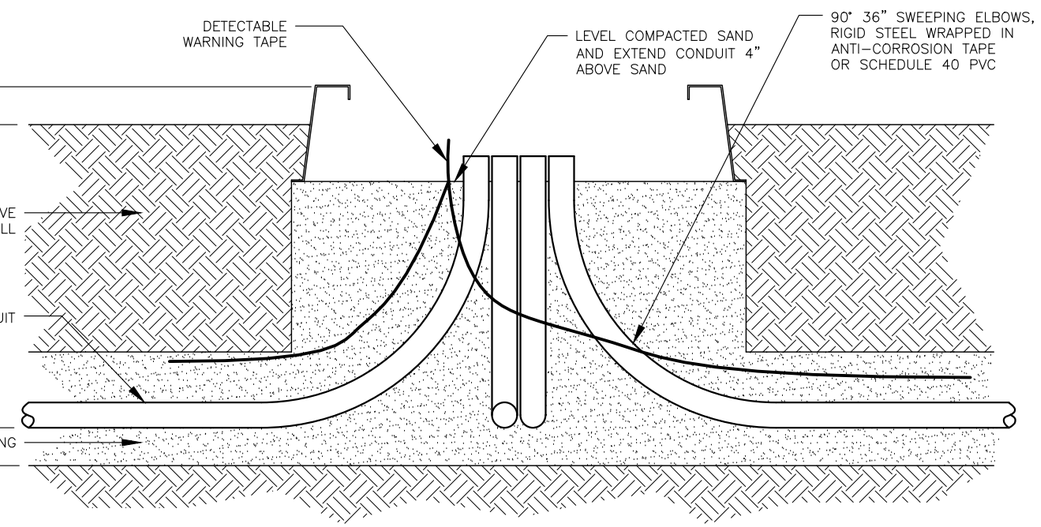

THREE PHASE JUNCTION - SECTION B-B

NOT TO SCALE

SHEET	ORIGINAL			
303	BY_____ DATE _____	SINGLE PHASE & THREE PHASE JUNCTION CAN SLEEVE DETAIL	STANDARD DRAWING NEPHI CITY CORPORATION	NEPHI CITY
	REVISIONS			21 EAST 100 NORTH
	1 BY_____ DATE _____			NEPHI, UTAH 84648
	2 BY_____ DATE _____			
	3 BY_____ DATE _____			

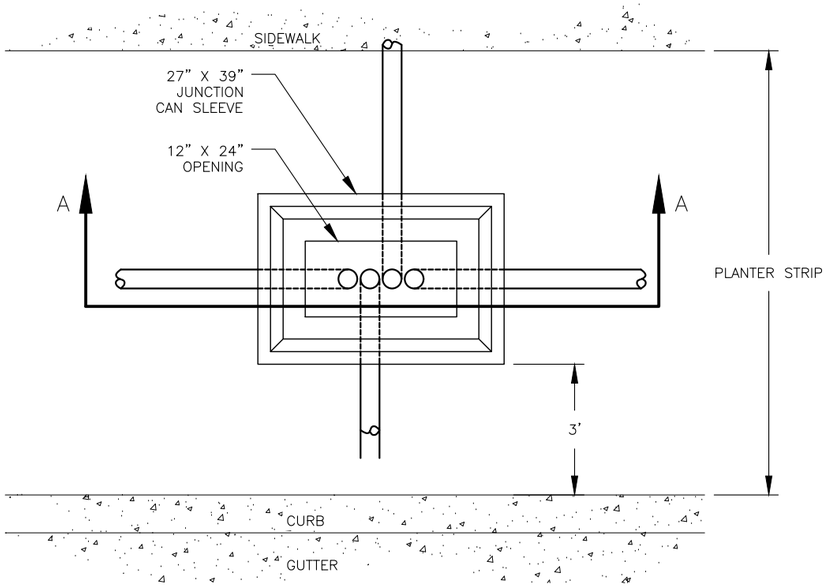

SINGLE PHASE JUNCTION - PLAN VIEW

NOT TO SCALE

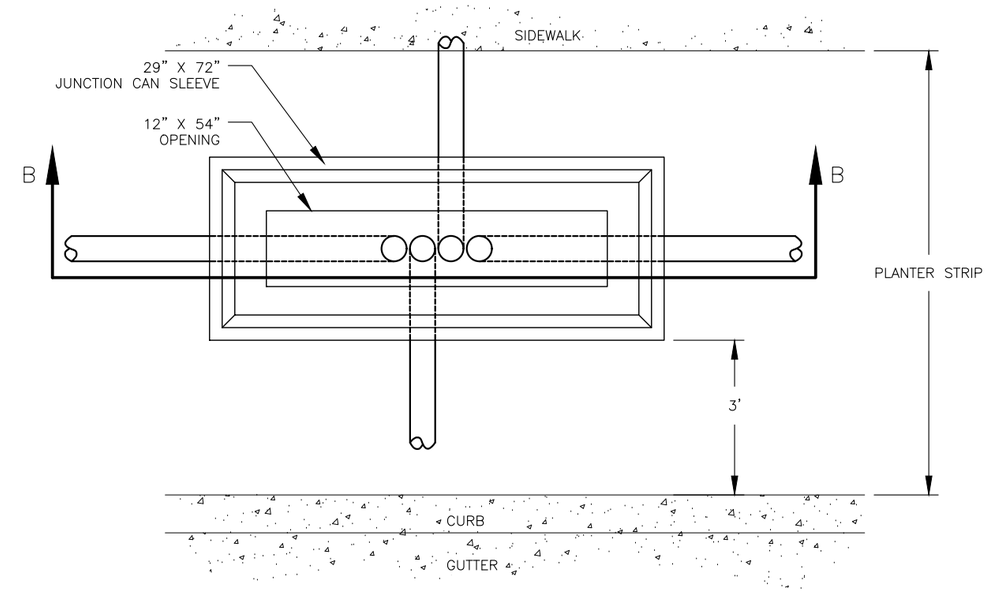

THREE PHASE JUNCTION - PLAN VIEW

NOT TO SCALE

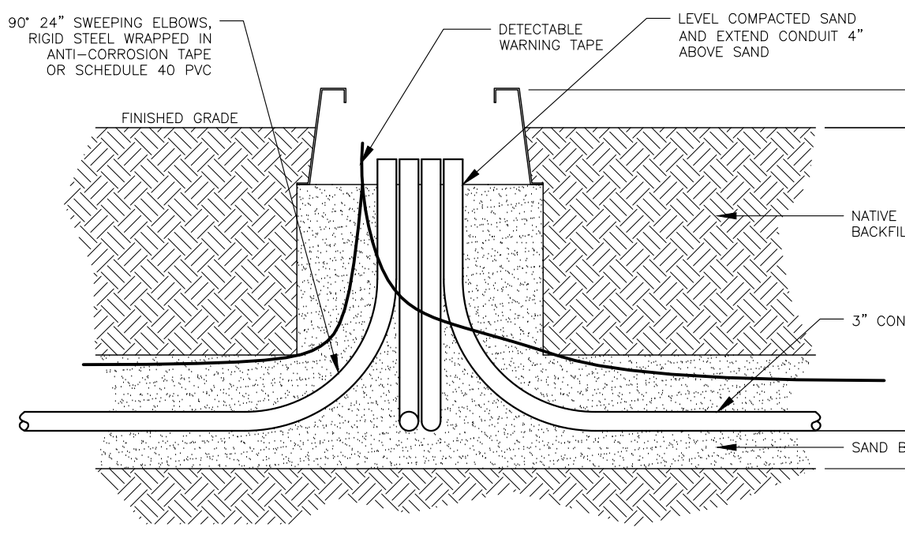

SINGLE PHASE JUNCTION - SECTION A-A

NOT TO SCALE

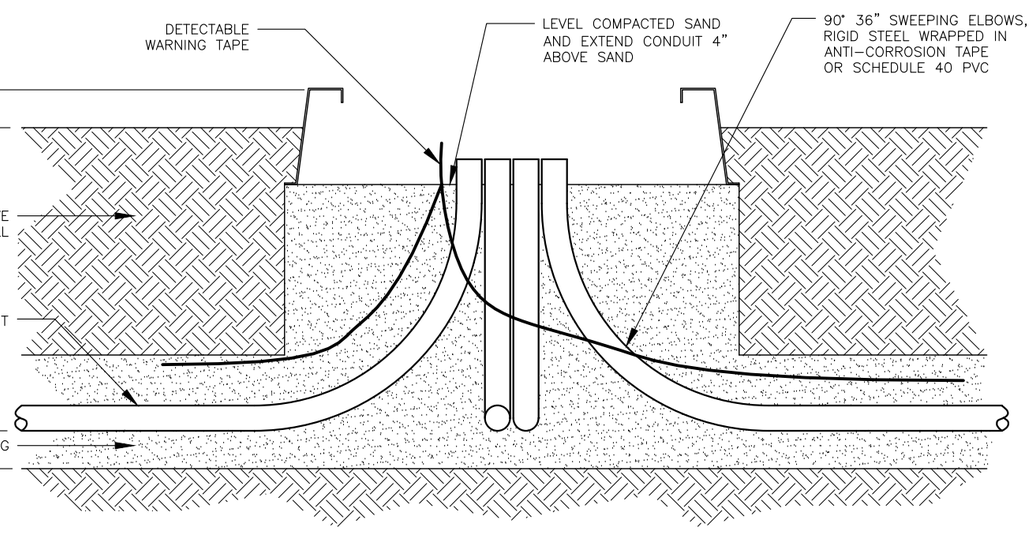

THREE PHASE JUNCTION - SECTION B-B

NOT TO SCALE

SHEET	ORIGINAL			
304	BY_____ DATE _____	SINGLE PHASE & THREE PHASE JUNCTION CAN SLEEVE DETAIL WITH PLANTER STRIP	STANDARD DRAWING NEPHI CITY CORPORATION	NEPHI CITY
	REVISIONS			
	1 BY_____ DATE _____			21 EAST 100 NORTH
	2 BY_____ DATE _____			NEPHI, UTAH 84648
	3 BY_____ DATE _____			

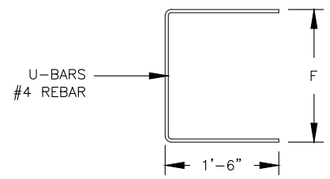

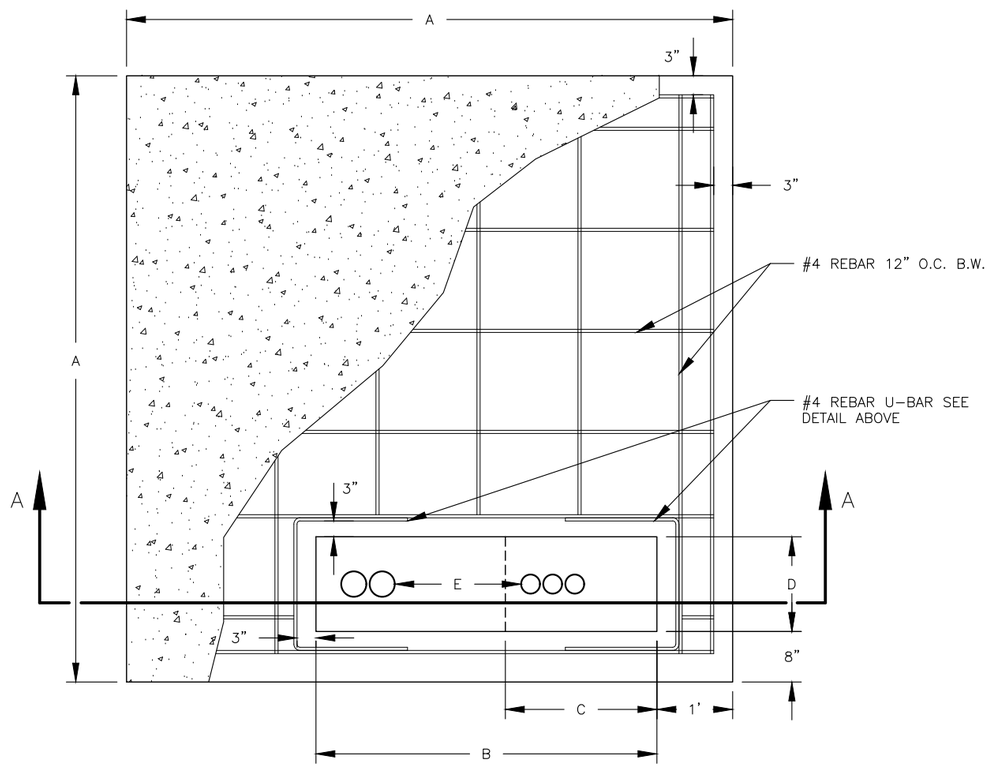

THREE PHASE TRANSFORMER PAD - PLAN VIEW

NOT TO SCALE

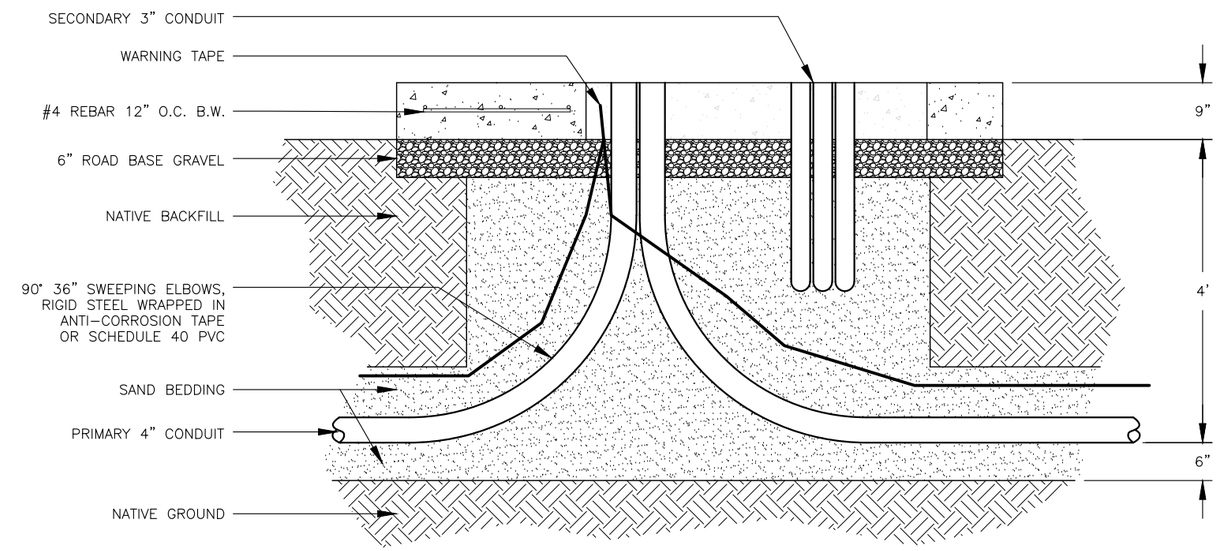

THREE PHASE TRANSFORMER PAD - SECTION A-A

NOT TO SCALE

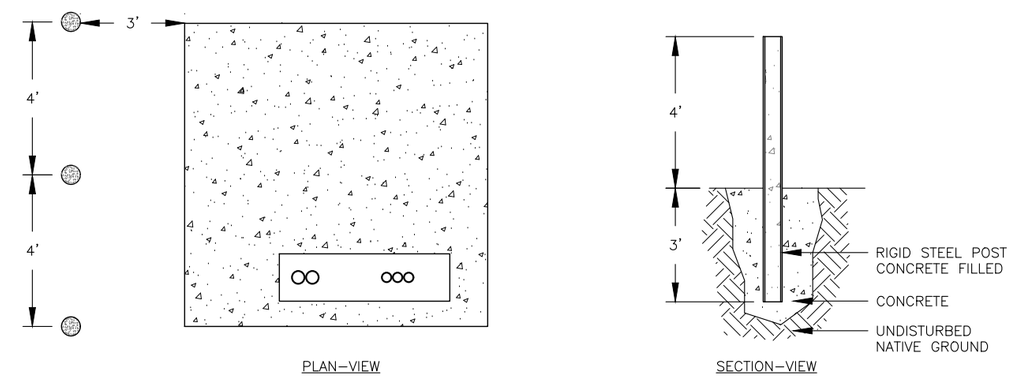

TRANSFORMER PAD PROTECTIVE BOLLARDS

NOT TO SCALE

TRANSFORMER PAD TYPE AND DIMENSIONS							
		DIMENSIONS					
TYPE	TRANSFORMER SIZE	A	B	C	D	E	F
1	75-500 KVA	6'-6"	3'-4"	1'-3"	1'	1'-3"	1'-6"
2	750-1000 KVA	7'	4'	1'-10"	1'-3"	1'-6"	1'-9"
3	1500-2000 KVA	8'	4'-6"	2'	1'-3"	1'-8"	1'-9"

NOTES:

1. CONDUIT SHALL EXTEND FLUSH WITH THE TOP OF THE PAD
2. CONDUIT MUST BE SEALED WITH TAPE TO PREVENT DEBRIS FROM ENTERING THE CONDUIT
3. PAD MUST BE PLACED WITHIN 15' OF A HARD-PAVED SURFACE, A MINIMUM OF 3' AWAY FROM ALL STRUCTURES, AND 10' AWAY FROM DOORS AND WINDOWS
4. A BUFFER OF 10' IN FRONT OF AND 3' EITHER SIDE OF THE TRANSFORMER MUST REMAIN OPEN AND CLEAR
5. ALL CONCRETE MUST BE A 4 BAG MIX WITH 6.5% AIR ENTRAINMENT, 3" OF CLEAR SPACE IS REQUIRED ON ALL REINFORCING STEEL, CONCRETE SHALL CURE 7 DAYS BEFORE THE TRANSFORMER IS PLACED
6. CONDUIT AND TRANSFORMER PAD MUST BE INSPECTED BY NEPHI CITY POWER PRIOR TO BACKFILLING AND POURING CONCRETE, CONTRACTOR SHALL CALL 24 HOURS IN ADVANCE TO SCHEDULE AN INSPECTION
7. PROTECTIVE BOLLARDS ARE TO BE PLACED ON ALL SIDES OF THE TRANSFORMER EXPOSED TO TRAFFIC

SHEET 305

ORIGINAL
BY_____ DATE_____
REVISIONS
1 BY_____ DATE_____
2 BY_____ DATE_____
3 BY_____ DATE_____

THREE PHASE TRANSFORMER PAD DETAIL

STANDARD DRAWING
NEPHI CITY CORPORATION

NEPHI CITY
21 EAST 100 NORTH
NEPHI, UTAH 84648

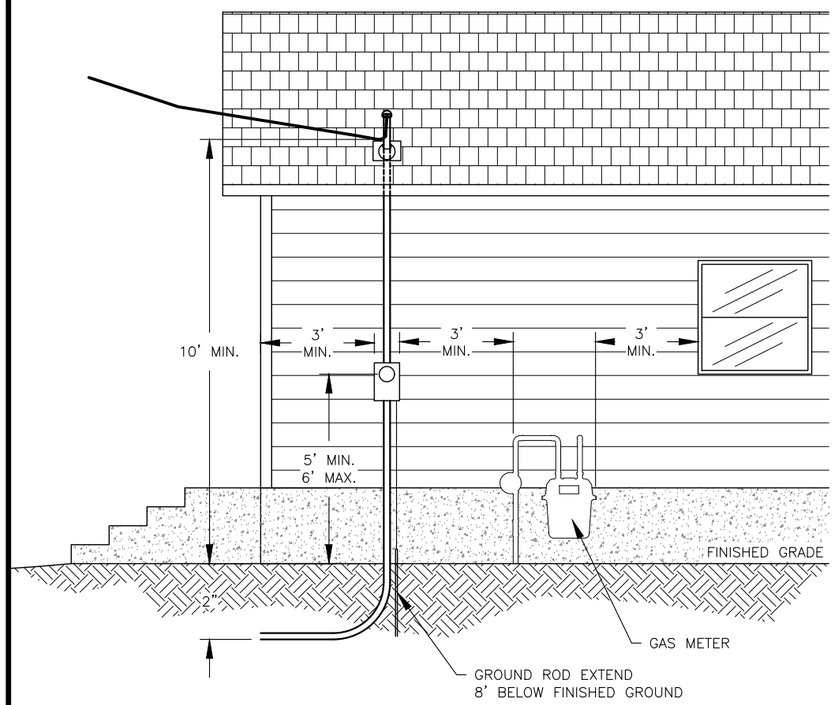

RESIDENTIAL ELECTRICAL SERVICE CONNECTION

NOT TO SCALE

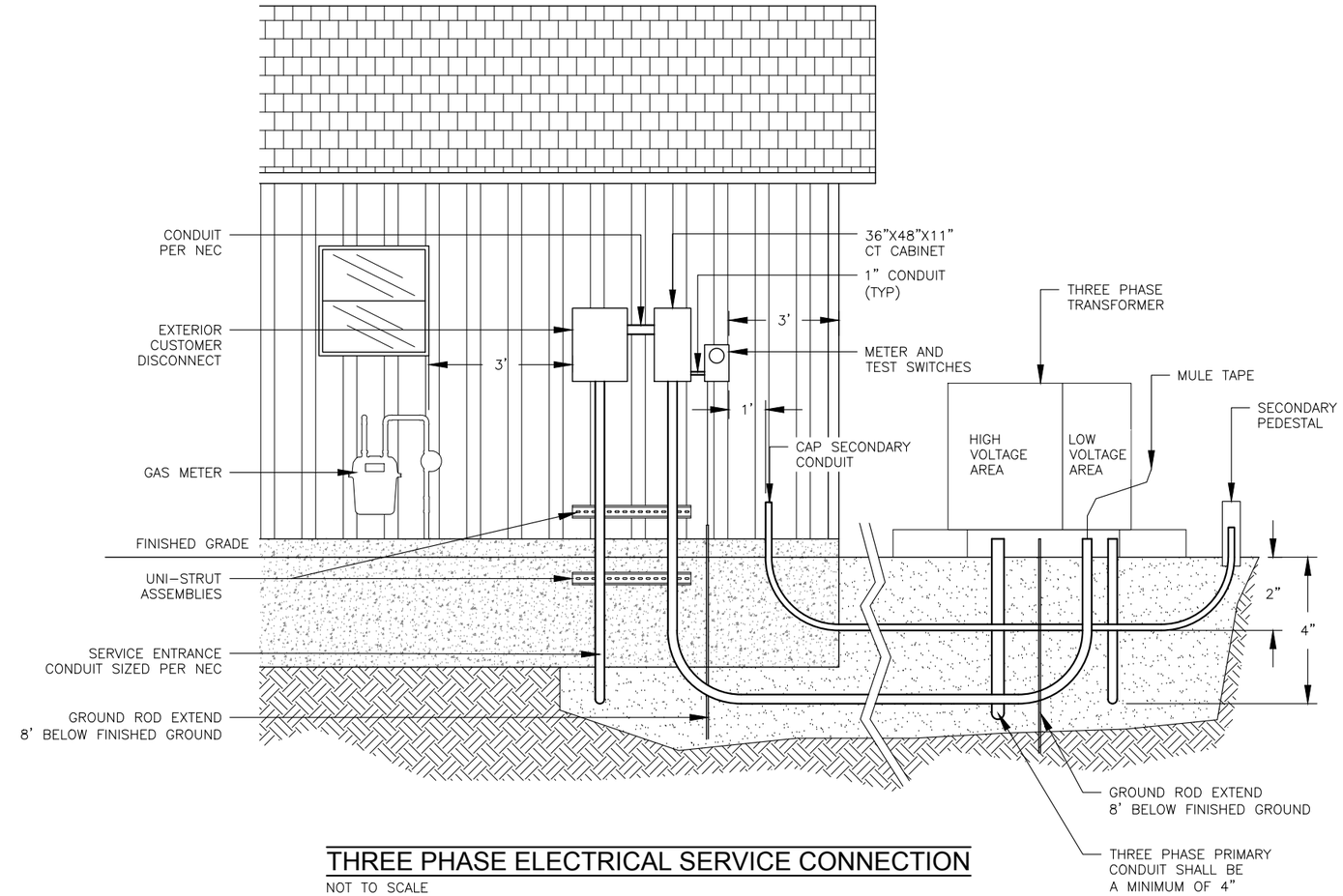

THREE PHASE ELECTRICAL SERVICE CONNECTION

NOT TO SCALE

RESIDENTIAL SERVICE NOTES:

1. HEIGHT OF THE METER IS 5' MINIMUM AND 6' MAXIMUM ABOVE FINISHED GRADE
2. POINT OF ATTACHMENT ON ROOF SHALL PROVIDE MINIMUM CLEARANCE AS SPECIFIED IN THE NATIONAL ELECTRICAL CODE 230-24, BUT SHALL NOT BE LESS THAN 10' FROM FINAL GRADE TO THE SERVICE DRIP LOOP
3. 8' GROUND ROD IS REQUIRED AS PER NATIONAL ELECTRICAL CODE 250-83(C)
4. THE SERVICE CONDUCTOR DRIP LOOP AT LEAST 3' ABOVE THE ROOF WITH THE EXCEPTION OF THE 18" NATIONAL ELECTRICAL CODE 230-24(A)
5. OVERHEAD SERVICE LINE REQUIRES A MINIMUM OF 12' CLEARANCE FOR RESIDENTIAL PROPERTIES AND DRIVEWAYS, AND A MINIMUM OF 18' FOR PUBLIC STREETS
6. ELECTRICAL METER SHALL BE A MINIMUM OF 3' FROM GAS METERS, WINDOWS, PORCHES AND DOORS
7. ELECTRICAL METER SHALL BE A MINIMUM OF 3' FROM THE FRONT OF THE HOUSE AND NO MORE THE 10' FROM THE FRONT OF THE HOUSE
8. UNDER GROUND SERVICE CONDUCTOR SHALL BE 2" MINIMUM, RIGID METALLIC, IMC OR SCHEDULE 40 PVC CONDUIT, ONLY RIGID METAL OR IMC WILL BE ALLOWED TO BE EXPOSED ABOVE GROUND LEVEL.
9. OVERHEAD SERVICE CONDUCTOR SHALL BE 2" MIINIMUM, RIGID METAL OR IMC CONDUIT
10. CLEARANCES SHOWN AND MENTIONED ABOVE ARE BASED ON THE CURRENT NATIONAL ELECTRICAL CODE, CLEARANCES BASED ON 150 VOLTS TO GROUND LIMITATIONS

THREE PHASE SERVICE NOTES:

1. ALL SERVICE LOCATIONS, MATERIALS, EQUIPMENT SHALL BE APPROVED BY NEPHI CITY POWER SUPERINTENDENT PRIOR TO INSTALLATION
2. 36" MINIMUM CLEARANCES (SIDE AND ABOVE) FROM DOORS, WINDOWS, STAIRS GAS METERS SHALL BE REQUIRED, ADDITIONAL CLEARANCES MAY BE REQUIRED
3. 8' MINIMUM CLEARANCE SHALL BE REQUIRED IN FRONT OF SERVICES, AND METERS
4. CITY WILL FURNISH METER-BASE AND TEST SWITCH FOR CONTRACTOR TO INSTALL
5. GROUNDING AND BONDING OF CABINETS, CONDUITS, AND OTHER EQUIPMENT SHALL MEET NATIONAL ELECTRICAL CODE
6. SERVICES 200 AMPS OR LESS SHALL USE A LINK BYPASS METER-BASE
7. SERVICES 800 AMPS OR LESS MAY USE STAND ALONE TYPE CT CABINETS (MILBANK P/N: CT364811-HC & MOUNTING RACK P/N: K4798 OR APPROVED EQUAL)
8. FOR SERVICES LARGER THAN 800 AMPS CONTACT THE NEPHI CITY POWER SUPERINTENDENT
9. SERVICE CONDUITS SHALL BE A MINIMUM OF 4' BURY DEPTH AND MEET NEPHI CITY STANDARDS
10. ELECTRICAL CONTRACTOR SHALL PROVIDE AND INSTALL SERVICE CONDUCTORS, AND SHALL MAKE CONNECTIONS IN THE SECONDARY SIDE OF THE TRANSFORMER
11. CUSTOMER SHALL OWN AND MAINTAIN SERVICE CONDUCTORS FROM TRANSFORMER TO THE CUSTOMER SERVICE DISCONNECT

SHEET	ORIGINAL		
306	BY_____ DATE _____	RESIDENTIAL & COMMERCIAL SERVICES CONNECTION DETAILS	STANDARD DRAWING NEPHI CITY CORPORATION
	REVISIONS		
	1 BY_____ DATE _____		
	2 BY_____ DATE _____		
	3 BY_____ DATE _____		

NEPHI CITY
21 EAST 100 NORTH
NEPHI, UTAH 84648

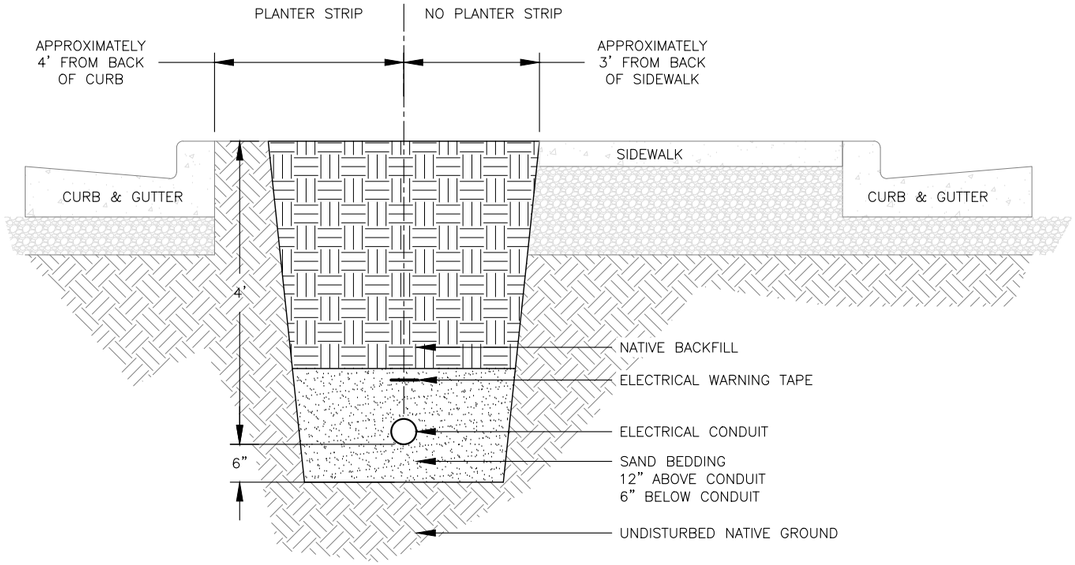

RESIDENTIAL BLOCK SYSTEM CONDUIT TRENCH DETAIL

NOT TO SCALE

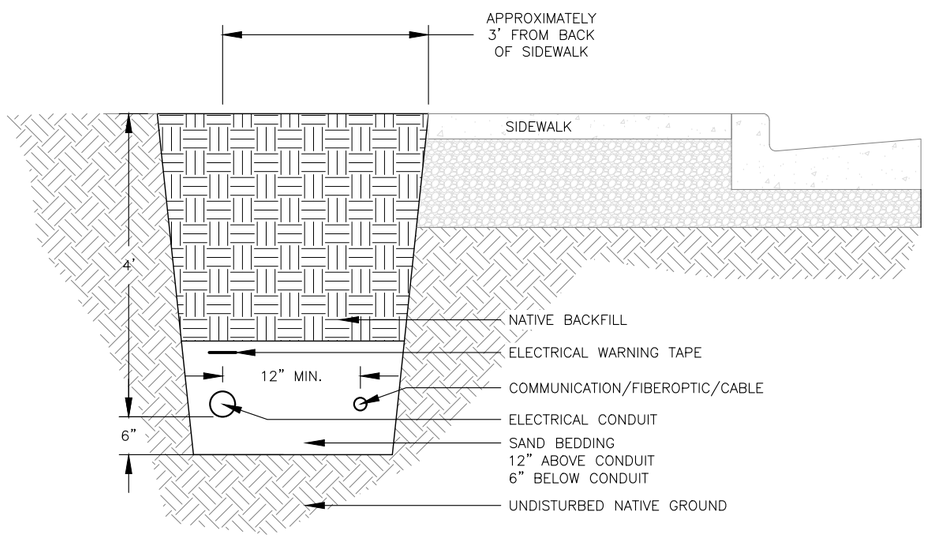

RESIDENTIAL SUBDIVISION CONDUIT TRENCH DETAIL

NOT TO SCALE

GENERAL ELECTRICAL NOTES:

TRENCHING SPECIFICATIONS

1. ALL RESIDENTIAL DEVELOPMENT TRENCHES MUST BE BETWEEN 1–2 FEET BEHIND SIDEWALK OR CONTAINED WITHIN THE PLANTER STRIP
2. ALL PRIMARY TRENCHES MUST BE 48" DEEP
3. ALL SECONDARY TRENCHES MUST BE 24" DEEP, IF THE SECONDARY IS RUN WITH PRIMARY, THE TRENCH DEPTH MUST BE 48" DEEP
4. IT IS IMPORTANT THAT ROAD CROSSINGS BE PLACED CORRECTLY (SITE PLANS ARE EXAGGERATED TO MAKE THEM EASIER TO READ, THEY ONLY SHOW THE APPROXIMATE LOCATION OF EQUIPMENT). PLEASE CONTACT NEPHI CITY POWER BEFORE PLACEMENT.
5. ONE FOOT OF SAND MUST BE PLACED ON TOP OF CONDUIT FOLLOWED BY 3" WIDE, RED, DETECTABLE–FOIL, ELECTRICAL WARNING TAPE (5 MILS THICKNESS)
6. WARNING TAPE TO BE TIED TOGETHER TO FORM A CONTINUOUS LENGTH, AND EXTENDING 36" ABOVE FINISH GRADE BY ALL CONDUIT STUBS, ALL TRENCHES MUST BE INSPECTED PRIOR TO BACKFILLING
7. TRENCHES SHOULD BE SPOT BACKFILLED TO PREVENT MOVEMENT OF TAPE DURING BACKFILL
8. SELECT BACKFILL MUST BE COMPACTED IN 1 FOOT LIFTS TO PREVENT SETTLING
9. ALL BACKFILL COVERING CONDUIT MUST BE BROUGHT UP TO FINISH GRADE
10. ALL AREAS DISTURBED BY EXCAVATION AND BACKFILLING CONSTRUCTION SHALL BE RESTORED TO THE ORIGINAL CONDITION, OR BETTER BY THE CONTRACTOR

CONDUIT SPECIFICATIONS

1. CONDUIT SIZES: CHECK SITE PLANS OR CONTACT NEPHI CITY POWER CONCERNING CONDUIT DIAMETER
2. ELBOWS CAN BE EITHER PVC SCH 40 OR RIGID STEEL, ALL 4" PRIMARY ELBOWS MUST HAVE A RADIUS OF 36", ALL 3" PRIMARY VERTICAL SWEEPS MUST HAVE A 24" RADIUS, AND HORIZONTAL SWEEPS MUST HAVE A 36" RADIUS, ALL 2" SECONDARY ELBOWS MUST HAVE A RADIUS OF 18"
3. IF STEEL ELBOWS ARE USED, THEY MUST BE TAPED WITH ANTI–CORROSION TAPE OR HAVE A PLASTIC COATING
4. CONTINUOUS LENGTHS OF CONDUIT CAN ONLY HAVE A MAXIMUM OF FOUR 90° ELBOWS PER WIRE
5. ALL ELECTRICAL CONDUITS WILL BE LAID ON THE PROPERTY SIDE OF THE TRENCH
6. PHONE AND CABLE CAN BE PLACED IN THE SAME TRENCH, BUT MUST BE PLACED ON THE ROADSIDE WITH 12" OF PARALLEL, HORIZONTAL SEPARATION ALONG THE ELECTRICAL CONDUIT. COMMUNICATION WILL BE PLACED AT THE SAME DEPTH AND MUST BE INSPECTED PRIOR TO BACKFILLING TO ENSURE APPROPRIATE PLACEMENT
7. ALL FUTURE RESIDENTIAL SERVICE CONNECTIONS WILL BE STUBBED OUT 10' PAST THE ELECTRICAL BOXES OR TRANSFORMERS WITH GRAY, PVC, SCH 40 CONDUIT. THE SIZE OF CONDUIT WILL BE DETERMINED BY NEPHI CITY POWER AND IS BASED ON THE SERVICE SIZE
8. EACH CONDUIT STUBBED OUT WILL BE MARKED WITH THE APPROPRIATE SIZE CONDUIT
9. OVERHEAD TO UNDERGROUND: CONTRACTOR WILL SUPPLY ONE STICK (10') OF RIGID CONDUIT EXTENDING FROM FINISH GRADE UP THE RISER POLE, NEPHI CITY POWER WILL SUPPLY THE APPROPRIATE STANDOFFS TO BE USED TO ATTACH THE FIRST STICK OF RIGID CONDUIT TO THE POLE

TRANSFORMER SLEEVE SPECIFICATIONS

1. TRANSFORMERS WILL BE PLACED ONE FOOT BEHIND SIDEWALK, FACING PAVED SURFACE AND CENTERED 3' FROM DIVIDING LOT LINES, POWER EQUIPMENT WILL NORMALLY BE PLACED ON THE SIDE OF THE LOT LINE OPPOSITE OTHER UTILITIES
2. CONDUITS RISING INTO TRANSFORMER PADS MUST BE ABLE TO FIT INTO A 12" X 24" OPENING
3. PRIMARY CONDUIT ARE ALWAYS ON THE LEFT AND SECONDARY CONDUIT ARE ON THE RIGHT, WHEN FACING THE TRANSFORMER
4. THE PRIMARY AND SECONDARY CONDUITS MUST BE GROUPED INTO TWO SEPARATE BUNDLES
5. A LEVEL, COMPACTED, SAND BASE MUST BE PROVIDED TO SET THE TRANSFORMER SLEEVE, ALL SLEEVES MUST SIT LEVEL WITH 6" OF SLEEVE EXTENDING ABOVE TOP BACK OF CURB, INSIDE GRADE OF PAD WILL BE LEVEL WITH BOTTOM OF SLEEVE AND CONDUITS MUST BE CUT OFF 4" ABOVE INSIDE GRADE. IF THE TRANSFORMER SETTLES OR IS SET AT THE WRONG ELEVATION, THE DEVELOPER WILL BE CHARGED TO HAVE THE TRANSFORMER BASE RESET
6. NEPHI CITY POWER WILL PROVIDE A GROUND ROD TO BE PLACED BY THE CONTRACTOR IN BETWEEN THE PRIMARY AND SECONDARY CONDUIT STUBS
7. SEE TRANSFORMER SLEEVE DETAIL SHEET FOR SPECIFIC INSTALLATION REQUIREMENTS

SECONDARY BOX SPECIFICATIONS

1. SECONDARY BOXES WILL BE PLACED ONE FOOT BEHIND SIDEWALK AND CENTERED 3' FROM DIVIDING LOT LINES. POWER EQUIPMENT WILL NORMALLY BE PLACED ON THE SIDE OF THE LOT LINE OPPOSITE OTHER UTILITIES
2. CONDUITS WILL BE STUBBED UP, BUNDLED TIGHT TOGETHER, WITH A SAND BASE COMPACTED TO FINAL GRADE AROUND CONDUIT. CUT CONDUIT OFF 6" ABOVE FINAL GRADE

SECTIONALIZER SPECIFICATIONS

1. SECTIONALIZERS WILL BE PLACED ONE FOOT BEHIND SIDEWALK AND FACING HARD PAVED SURFACE. CONTACT NEPHI CITY POWER FOR EXACT PLACEMENT
2. CONDUITS RISING INTO A SECTIONALIZER MUST BE STAGGERED, CENTERED AND GROUPED TOGETHER TO FIT INTO A 12" X 36" OPENING FOR THREE PHASE AND A 12" X 20" OPENING FOR SINGLE PHASE
3. GROUND SLEEVES WILL BE SET SIMILAR TO THE TRANSFORMER SLEEVES
4. NEPHI CITY POWER WILL PROVIDE A GROUND ROD TO BE PLACED 6" FROM THE CONDUITS STUBBED INTO THE SECTIONALIZERS BY THE CONTRACTOR

UNDERGROUND SECONDARY SPECIFICATIONS

1. CONTRACTOR IS RESPONSIBLE FOR EXTENDING THE CONDUIT FROM THE POWER SOURCE TO THE METER EQUIPMENT, AND INSTALLING PULL STRING, CONTACT NEPHI CITY POWER FOR FURTHER DETAILS
2. CONTRACTOR IS RESPONSIBLE FOR PROVIDING THE CONDUIT AND WEATHER HEAD FOR CONNECTING TO EXISTING OVERHEAD POWER LINES, THE CONTRACTOR IS TO INSTALL THE FIRST STICK OF RIGID CONDUIT, NEPHI CITY POWER WILL INSTALL THE REMAINING EQUIPMENT ON THE POLE

SHEET	ORIGINAL			
307	BY_____ DATE _____	TRENCH DETAIL & GENERAL ELECTRICAL NOTES	STANDARD DRAWING NEPHI CITY CORPORATION	NEPHI CITY
	REVISIONS			21 EAST 100 NORTH
	1 BY_____ DATE _____			NEPHI, UTAH 84648
	2 BY_____ DATE _____			
	3 BY_____ DATE _____			

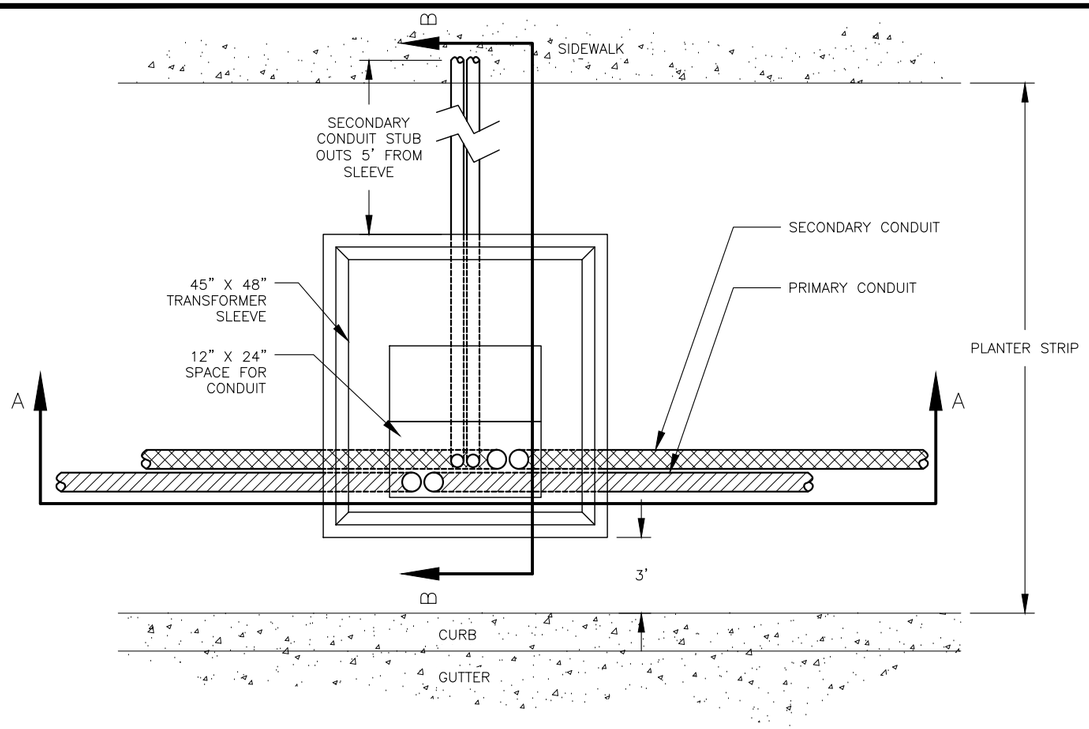

TRANSFORMER SLEEVE - PLAN VIEW

NOT TO SCALE

NOTES:

1. ALL CONDUIT SHALL BE EMBEDDED IN 6" OF SAND BELOW THE CONDUIT AND 12" ABOVE THE CONDUIT
2. 3" CONDUIT ELBOWS TO BE 90° 24" SWEEPING RADIUS BENDS
3. 2" CONDUIT ELBOWS TO BE 90° 18" SWEEPING RADIUS BENDS
4. SECONDARY CONDUIT STUB OUTS SHALL BE 2"
5. SINGLE PHASE, PRIMARY AND SECONDARY CONDUIT SHALL BE 3"
6. ELBOWS TO BE RIGID STEEL WRAPPED IN ANTI-CORROSION TAPE OR SCHEDULE 40 PVC
7. CONDUIT AND TRANSFORMER SLEEVE MUST BE INSPECTED BY NEPHI CITY POWER PRIOR TO BACKFILLING, CONTRACTOR SHALL CALL 24 HOURS IN ADVANCE TO SCHEDULE AN INSPECTION

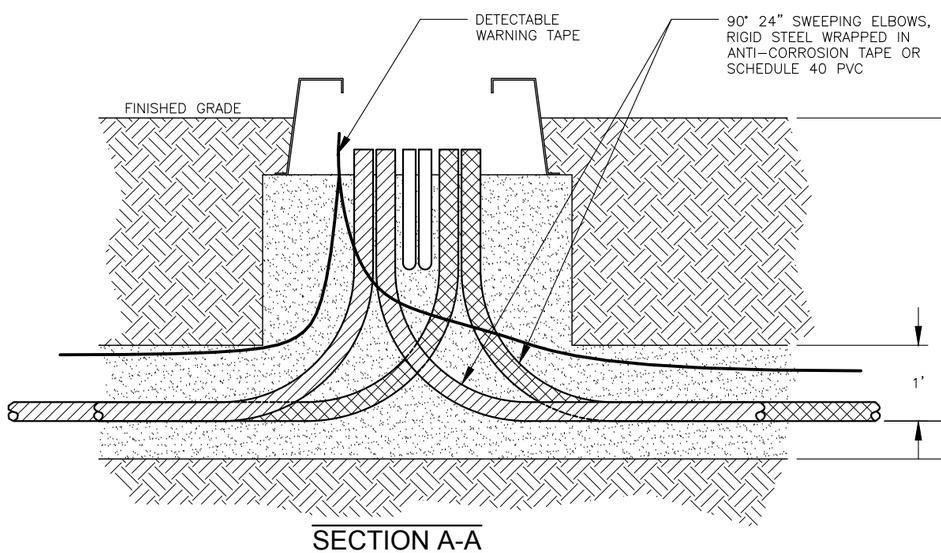

SECTION A-A

NOT TO SCALE

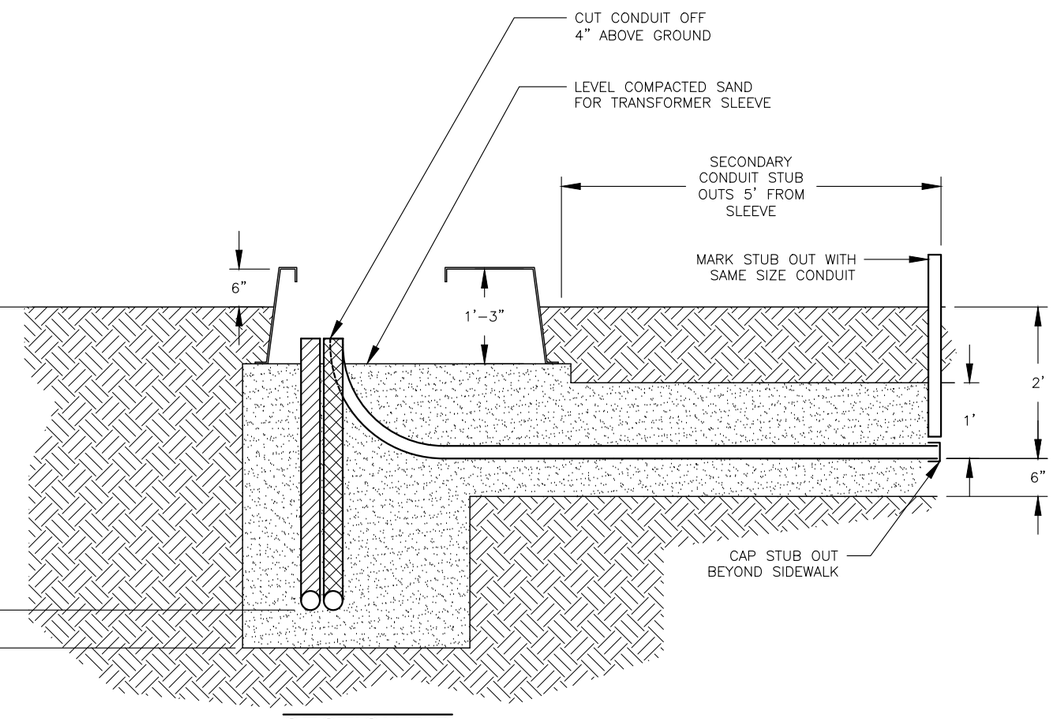

SECTION B-B

NOT TO SCALE

SHEET	ORIGINAL			
308	BY_____ DATE_____	SINGLE PHASE TRANSFORMER (IN PLANTER STRIP) SLEEVE SITE DETAIL	STANDARD DRAWING NEPHI CITY CORPORATION	NEPHI CITY 21 EAST 100 NORTH NEPHI, UTAH 84648
	REVISIONS			
	1 BY_____ DATE_____			
	2 BY_____ DATE_____			
	3 BY_____ DATE_____			

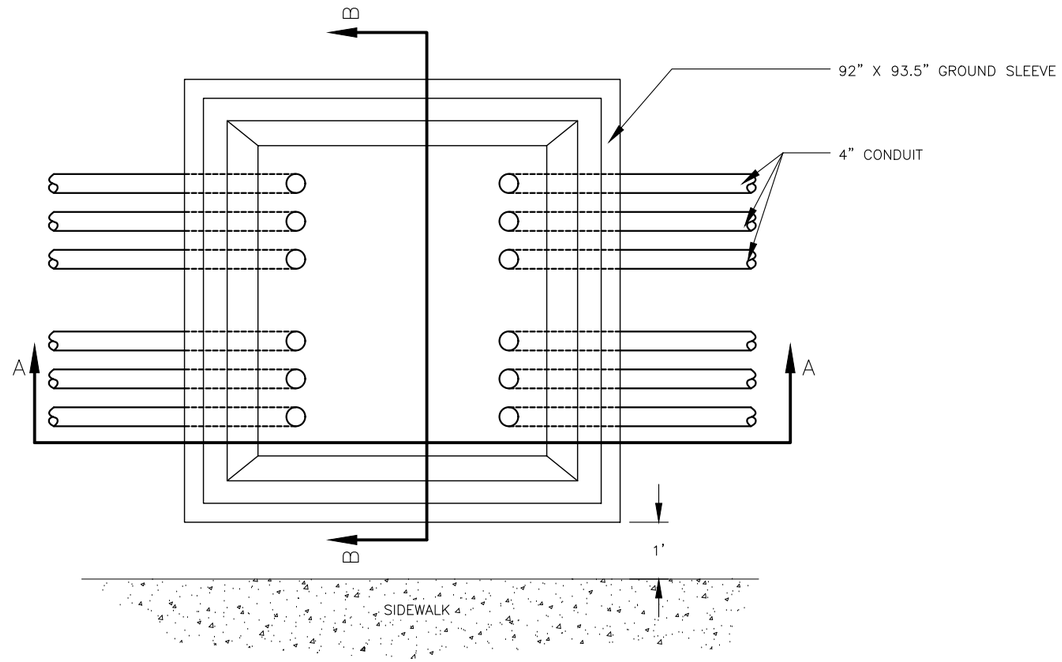

SWITCH GEAR SLEEVE - PLAN VIEW

NOT TO SCALE

NOTES:

1. ALL CONDUIT SHALL BE EMBEDDED IN 6" OF SAND BELOW THE CONDUIT AND 12" ABOVE THE CONDUIT
2. 4" CONDUIT ELBOWS TO BE 90° 36" SWEEPING RADIUS BENDS
3. ELBOWS TO BE RIGID STEEL WRAPPED IN ANTI-CORROSION TAPE OR SCHEDULE 40 PVC
4. CONDUIT AND TRANSFORMER SLEEVE MUST BE INSPECTED BY NEPHI CITY POWER PRIOR TO BACKFILLING, CONTRACTOR SHALL CALL 24 HOURS IN ADVANCE TO SCHEDULE AN INSPECTION

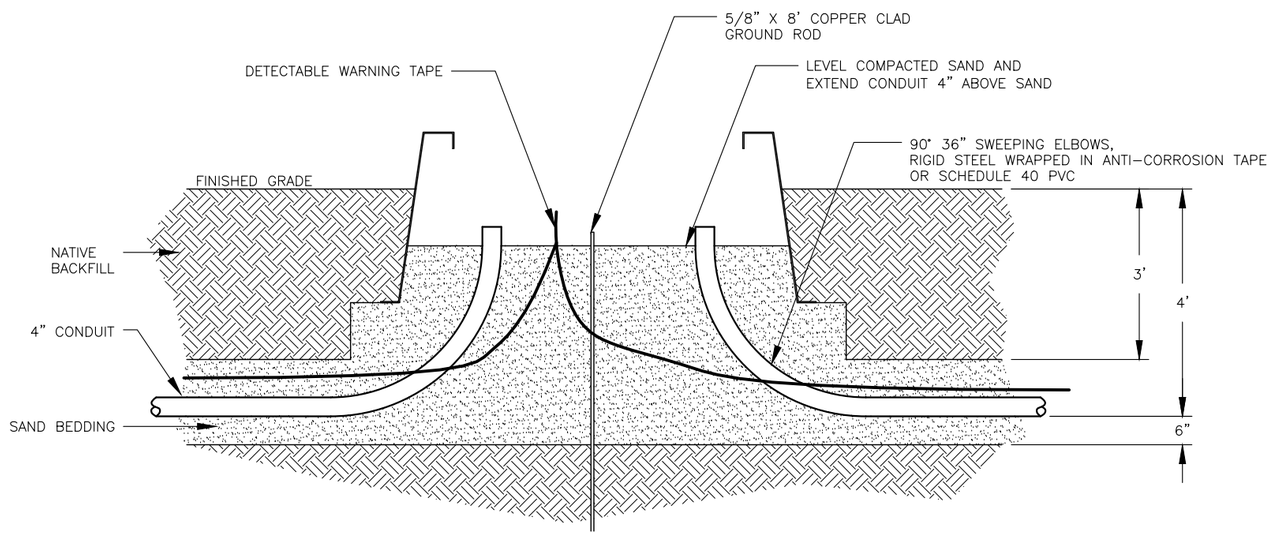

SECTION A-A

NOT TO SCALE

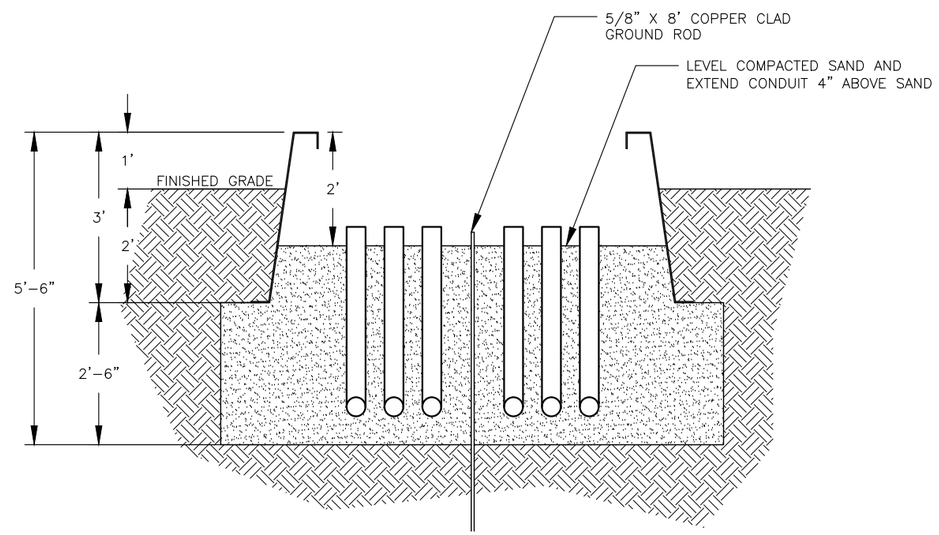

SECTION B-B

NOT TO SCALE

SHEET	ORIGINAL			
309	BY_____ DATE_____	P 9/11 SWITCH GEAR CONDUIT AND SLEEVE DETAIL	STANDARD DRAWING NEPHI CITY CORPORATION	NEPHI CITY
	REVISIONS			21 EAST 100 NORTH NEPHI, UTAH 84648
	1 BY_____ DATE_____			
	2 BY_____ DATE_____			
	3 BY_____ DATE_____			

NEPHI CITY POLICY
GAS SERVICE REQUIREMENTS

Call Blue Stakes before digging.
It's the law.
1-800-662-4111

1. The gas meter is to be located within 10 feet of front (street side) of structure.
2. The customer is responsible to connect piping to the low-pressure side of the gas meter.
3. The gas meter is to be a minimum of 3 feet from windows that open, vents or openings.
4. The gas meter is to be a minimum of 3 feet measured horizontally from the electric service.
5. Utility must have free working space of 12 inches to the sides and 36 inches in front of meter.
6. If the gas meter is exposed to vehicle traffic, the meter must be protected by installing barrier posts (Contact Gas Department for specifications).
7. Dig trench 24 inches minimum 36 inches maximum from finished grade.
8. Backfill around gas pipe is to be screened sand. Sand is to envelop the gas pipe for 6 inches in all directions. Sand is to be provided by customer and must be on site and readily accessible to backhoe at time the gas service is installed.
9. A sleeve is required where the service riser passes dim pavement.
10. The gas line is <u>not</u> to be installed in the same trench with the power line.

If you have questions about any of these requirements, contact the Nephi City Gas Department @ 623-4914.

NEPHI CITY POLICY
APPLICATION FOR RESIDENTIAL GAS SERVICE

TO BE COMPLETED BY THE CONTRACTOR

CONTRACTOR _____

PHONE NUMBER _____

SUBDIVISION _____

ADDRESS/LOT # _____

I, THE UNDERSIGNED, HAVE RECEIVED AND UNDERSTAND THE REQUIREMENTS OF NEPHI CITY FOR THE INSTALLATION OF NATURAL GAS SERVICE AND AGREE TO THE CONDITIONS LISTED BELOW,

SIGNED _____ DATE: _____
(DO NOT SIGN UNTIL BOTTOM SECTION IS COMPLETE)

TOTAL CONNECTED LOAD _____ BTU/HR
DELIVERED PRESSURE (CIRCLE ONE) 4 OZ /2 LBS /5 LBS

TO BE COMPLETED BY THE NEPHI CITY

THE GAS METER FOR THIS INSTALLATION IS TO BE LOCATED ON THE _____ SIDE OF THE BUILDING.

EXCAVATION TO BE COMPLETED BY: SELECT ONE
❒ CONTRACTOR _____
❒ NEPHI CITY _____

THIS APPLICATION IS APPROVED BASED ON THE ABOVE LISTED CONDITIONS.

SIGNED _____ DATE: _____
GAS DEPARTMENT REPRESENTATIVE

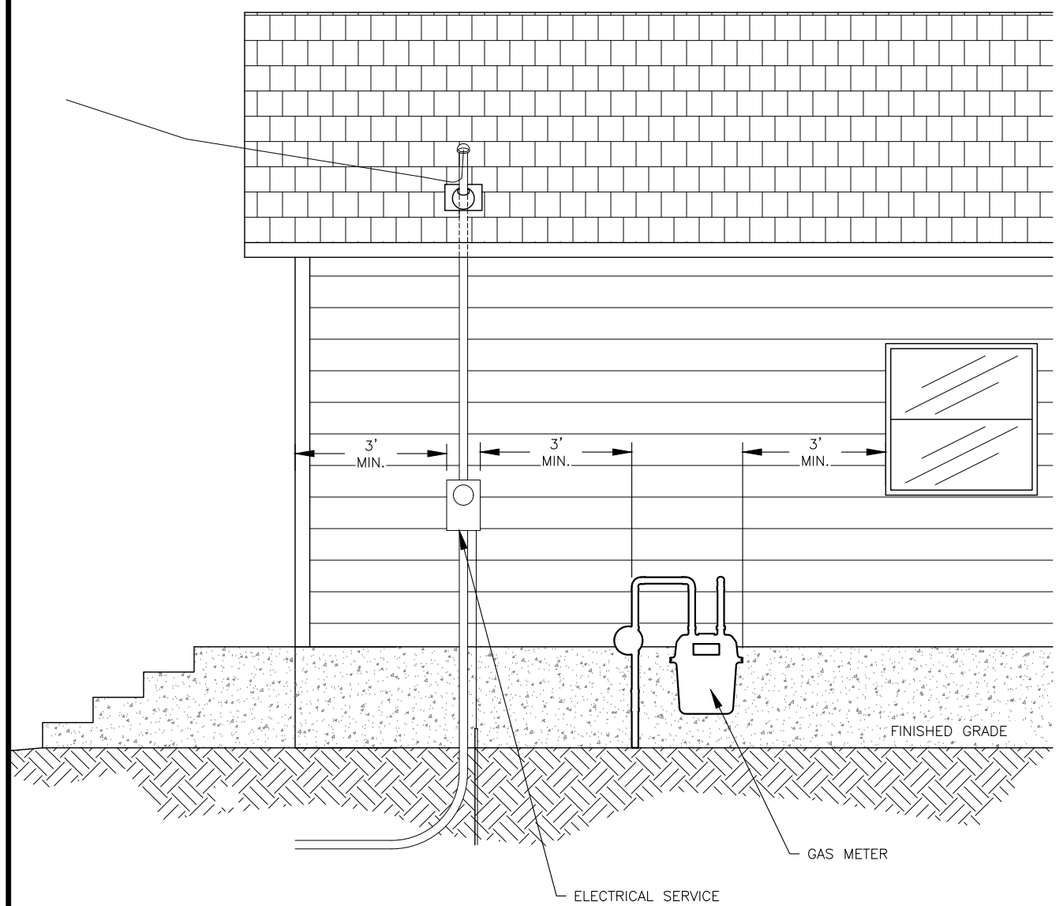

RESIDENTIAL NATURAL GAS SERVICE CONNECTION

RESIDENTIAL SERVICE NOTES:

1. THE GAS METER IS TO BE LOCATED WITHIN 10 FEET OF FRONT (STREET SIDE) OF STRUCTURE.
2. THE CUSTOMER IS RESPONSIBLE TO CONNECT PIPING TO THE LOW-PRESSURE SIDE OF THE GAS METER.
3. THE GAS METER IS TO BE A MINIMUM OF 3 FEET FROM WINDOWS THAT OPEN, VENTS OR OPENINGS.
4. THE GAS METER IS TO BE A MINIMUM OF 3 FEET MEASURED HORIZONTALLY FROM THE ELECTRIC SERVICE.
5. UTILITY MUST HAVE FREE WORKING SPACE OF 12 INCHES TO THE SIDES AND 36 INCHES IN FRONT OF METER.
6. IF THE GAS METER IS EXPOSED TO VEHICLE TRAFFIC, THE METER MUST BE PROTECTED BY INSTALLING BARRIER POSTS (CONTACT GAS DEPARTMENT FOR SPECIFICATIONS).
7. DIG TRENCH 24 INCHES MINIMUM 36 INCHES MAXIMUM FROM FINISHED GRADE.
8. BACKFILL AROUND GAS PIPE IS TO BE SCREENED SAND. SAND IS TO ENVELOP THE GAS PIPE FOR 6 INCHES IN ALL DIRECTIONS. SAND IS TO BE PROVIDED BY CUSTOMER AND MUST BE ON SITE AND READILY ACCESSIBLE TO BACKHOE AT TIME THE GAS SERVICE IS INSTALLED.
9. A SLEEVE IS REQUIRED WHERE THE SERVICE RISER PASSES THROUGH PAVEMENT.
10. THE GAS LINE IS NOT TO BE INSTALLED IN THE SAME TRENCH WITH THE POWER LINE.

SHEET	ORIGINAL			
501	BY_____ DATE_____	RESIDENTIAL & COMMERCIAL SERVICES CONNECTION DETAILS	STANDARD DRAWING NEPHI CITY CORPORATION	NEPHI CITY
	REVISIONS			21 EAST 100 NORTH NEPHI, UTAH 84648
	1 BY_____ DATE_____			
	2 BY_____ DATE_____			
	3 BY_____ DATE_____			

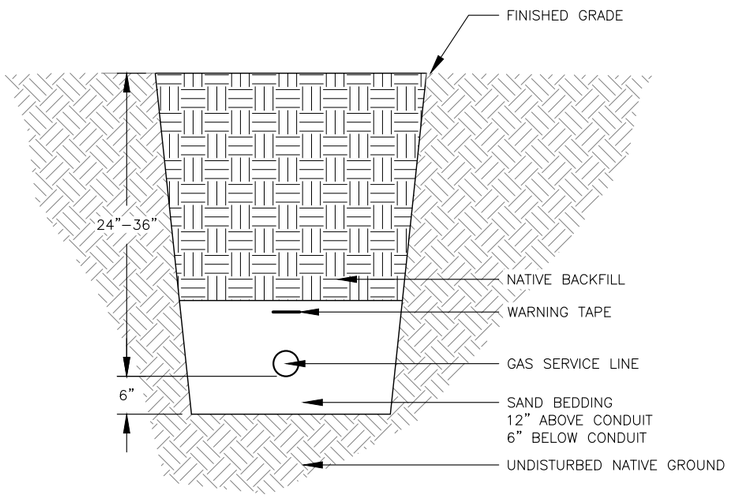

RESIDENTIAL SUBDIVISION SERVICE LINE TRENCH DETAIL

NOT TO SCALE

GENERAL NOTES:

1. THE GAS METER IS TO BE LOCATED WITHIN 10 FEET OF FRONT (STREET SIDE) OF STRUCTURE.
2. THE CUSTOMER IS RESPONSIBLE TO CONNECT PIPING TO THE LOW–PRESSURE SIDE OF THE GAS METER.
3. THE GAS METER IS TO BE A MINIMUM OF 3 FEET FROM WINDOWS THAT OPEN, VENTS OR OPENINGS.
4. THE GAS METER IS TO BE A MINIMUM OF 3 FEET MEASURED HORIZONTALLY FROM THE ELECTRIC SERVICE.
5. UTILITY MUST HAVE FREE WORKING SPACE OF 12 INCHES TO THE SIDES AND 36 INCHES IN FRONT OF METER.
6. IF THE GAS METER IS EXPOSED TO VEHICLE TRAFFIC, THE METER MUST BE PROTECTED BY INSTALLING BARRIER POSTS (CONTACT GAS DEPARTMENT FOR SPECIFICATIONS).
7. DIG TRENCH 24 INCHES MINIMUM 36 INCHES MAXIMUM FROM FINISHED GRADE.
8. BACKFILL AROUND GAS PIPE IS TO BE SCREENED SAND. SAND IS TO ENVELOP THE GAS PIPE FOR 6 INCHES IN ALL DIRECTIONS. SAND IS TO BE PROVIDED BY CUSTOMER AND MUST BE ON SITE AND READILY ACCESSIBLE TO BACKHOE AT TIME THE GAS SERVICE IS INSTALLED.
9. A SLEEVE IS REQUIRED WHERE THE SERVICE RISER PASSES THROUGH PAVEMENT.
10. THE GAS LINE IS NOT TO BE INSTALLED IN THE SAME TRENCH WITH THE POWER LINE.

SHEET	ORIGINAL			
502	BY_____ DATE _____	TRENCH DETAIL & GENERAL NOTES	STANDARD DRAWING NEPHI CITY CORPORATION	NEPHI CITY
	REVISIONS			21 EAST 100 NORTH
	1 BY_____ DATE _____			NEPHI, UTAH 84648
	2 BY_____ DATE _____			
	3 BY_____ DATE _____			

NEPHI CITY POLICY
SEWER LATERAL CONSTRUCTION STANDARDS

28 June 2016

The purpose of this document is to set forth and describe the requirements and standards for sewer laterals installed for structures outside of subdivisions, including connections to sewer mains.

The owner of the structure has the responsibility for the installation and future maintenance of these items. Sewer lateral installation is to be accomplished by an appropriately-licensed contractor.

At least 24 hours before any construction takes place on or within a public right-of-way, a street cut permit must be obtained from the Nephi City Streets Superintendent by the contractor performing the sewer work, and a pre-construction meeting must be held with the streets superintendent during his regular working hours.

The sewer line contractor will post with Nephi City a trench restoration bond, in a form acceptable to Nephi City, a trench restoration bond in the amount of $1,500.00.

<u>Street Cut and Restoration</u>

1. Asphalt must be saw-cut before excavation takes place. Asphalt must be cut back 1 foot on each side of the trench before asphalt restoration.
2. Any over-excavation of the trench will have to be compacted back to the standard described in number 3 below.
3. Trench restoration, including the pipe zone, will be according to the current edition of the APWA Manual of Standard Specifications.
4. No excavated material or imported backfill may be stored on asphalt surfaces, and such material must be stored along the frontage of the property being served and not on the frontage of adjacent properties.
5. The final layer before asphalt will be 6 inches of approved road base, compacted and tested to the standard described in number 3 above. The asphalt patch will be 4 inches of compacted, approved hot mix asphalt. Any damage done to surrounding asphalt during construction must also be repaired.
6. The trench, including compacted road base to the elevation of the existing asphalt, must be maintained until the asphalt patch is installed. The trench is to be patched with asphalt within 28 calendar days of the initial excavation. If the contractor has not installed an asphalt patch, approved by Nephi City, within the 28 days, the contractor will forfeit the trench restoration bond.
7. The owner's contractor is responsible for construction safety and for traffic safety and signing. The signing plan is to be approved at the pre-construction meeting.

8. The trench on the public right-of-way may not be left open overnight.

9. The trench restoration bond will be returned to the contractor after the streets superintendent's final approval of the job, including the final hot-mix asphalt patch.

   Any trench maintenance work ordered by the streets superintendent and not performed by the contractor within 24 hours will be performed by Nephi City and billed to the contractor. The amount of any unpaid billings for trench maintenance will be subtracted by the city from the trench restoration bond.

   The contractor may choose to release the bond to Nephi City and not perform the hot-mix asphalt patch.

<u>Sewer Piping and Connection to Sewer Main</u>

1. The Nephi City Water and Sewer Superintendent, or his designee, must be present when the contractor taps the sewer main and lays the first length of lateral pipe.

2. For connection to a PVC main line, a straight tap into the main will he made, with a gasket and lateral inserted.

3. For connection to a concrete or clay tile main line, the lateral pipe will be inserted into a section or the main line pipe where the contactor has broken out a circular opening. The lateral pipe is inserted no farther than to the inside of the main line pipe wall. The connection is then secured by concrete.

4. All materials used and construction methods employed must be approved by the superintendent at the pre-construction meeting.

Pipe zone backfill

1. BACKFILL: Do not use sewer rock or recycled RAP aggregate in the pipe zone without ENGNEER's written approval.

   A. Granular Fill below Pipe Spring Line.

      1) Sand bedding, unless specified otherwise by pipe manufacturer. When using concrete, provide at least Class 2,000 per APWA Section 03 30 04.
      2) Install and compact backfill material per pipe manufacturer recommendations.
      3) Water jetting is not allowed in backfilling operation.
      4) Submission of quality control compaction test result data developed for haunching areas may be requested by ENGINEER at any time. CONTRACTOR is to provide results of tests immediately upon request.

   B. Granular Fill above Pipe Spring Line.

      1) Sand Bedding, unless specified otherwise by pipe manufacturer, Place in lifts not exceeding 8 inches before compaction.
      2) Water jetting is not allowed in backfilling operation.
      3) Compact per APWA Section 31 23 26 to a modified proctor density of 95 percent or greater unless pipe manufacturer requires more stringent installation.

2. PIPE ZONE WIDTH: Provide width recommended by pipe manufacturer. Width of pipe zone is measured at the pipe spring line and includes any necessary sheathing. In trench box applications, follow manufacturer's recommendations.

3. PIPE LOCATION: Install pipe in center of trench or no closer than 6 inches from wall of pipe to wall of trench.

4. PEA GRAVEL: Pea gravel is not allowed in any part of the pipe zone.

5. FOUNDATION STABILIZATION: Use granular backfill borrow of APWA Section 31 05 13. Installation of stabilization-separation geotextile per APWA Section 31 05 19 will be required to separate backfill material and native subgrade materials if sewer rock cannot provide a working surface or to prevent soils migration.

Trench backfill

1. BACKFILL: Above the pipe zone.
   A. Granular Fill. Limit maximum particle size 6 inches. Place fill per APWA Section 31 23 24. Compact to a modified proctor density of 95 percent or greater. Maximum lift thickness is 8 inches before compaction. Do not use clay without ENGINEER's review and acceptance. Water jetting is NOT allowed in backfilling operation.
   B. Flowable Fill. Provide and place controlled low strength material per APWA Section 31 05 15. Cure the fill before placing surface restorations.

2. LANDSCAPED RESTORATION: Provide landscaped surfaces with topsoil. Rake to match existing grade. Replace vegetation to match pre-construction conditions. See APWA Section 32 92 00 or APWA Section 32 93 13 requirements.

3. PAVEMENT RESTORATION: Do not install asphalt or concrete surfacing until trench compaction is accepted by ENGINEER.

4. PEA GRAVEL: Pea gravel is not allowed in any part of the trench.

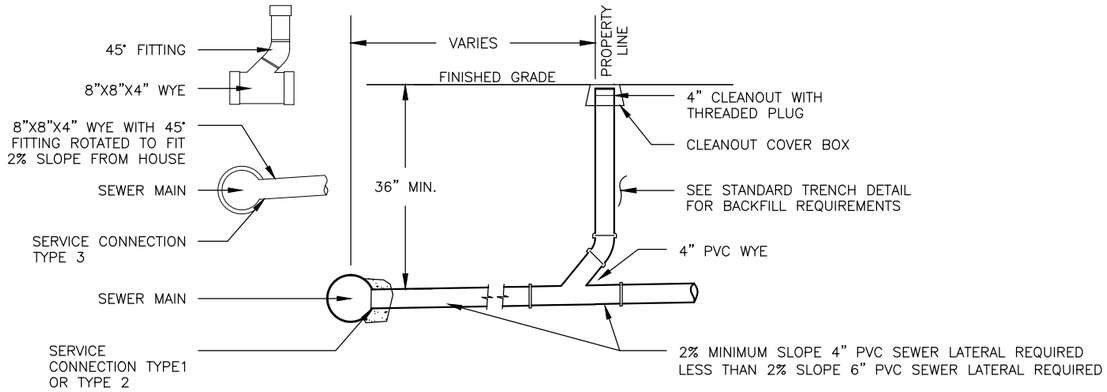

NOTES:

SERVICE CONNECTION TYPES:

1. FOR CONNECTION TO EXISTING PVC MAIN LINE, A STRAIGHT TAP INTO THE MAIN WILL BE MADE WITH A GASKET AND LATERAL INSERTED.
2. FOR CONNECTION TO EXISTING CONCRETE OR CLAY TILE MAIN LINE, THE LATERAL PIPE WILL BE INSERTED INTO A SECTION OF THE MAIN LINE PIPE WHERE THE CONTRACTOR HAS BROKEN OUT A CIRCULAR OPENING. THE LATERAL PIPE IS INSERTED NO FARTHER THAN TO THE INSIDE OF THE MAIN LINE PIPE WALL. THE CONNECTION IS THEN SECURED BY CONCRETE.
3. FOR CONNECTION ON NEW PVC LINE. INSTALL 8"X8"X4" WYE, ROTATED TO CREATE A 2% GRADE FROM THE RESIDENTIAL HOME

STANDARD SEWER LATERAL DETAIL

NOT TO SCALE

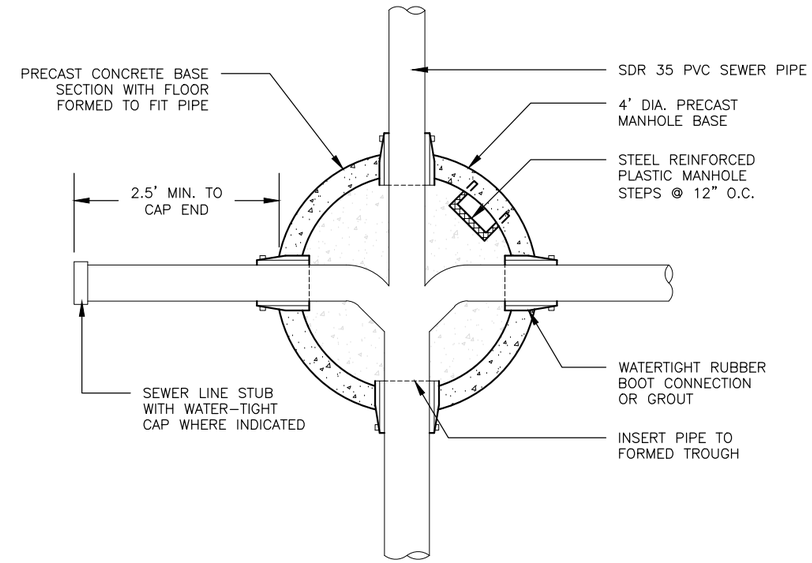

STANDARD SEWER MANHOLE PLAN VIEW

NOT TO SCALE

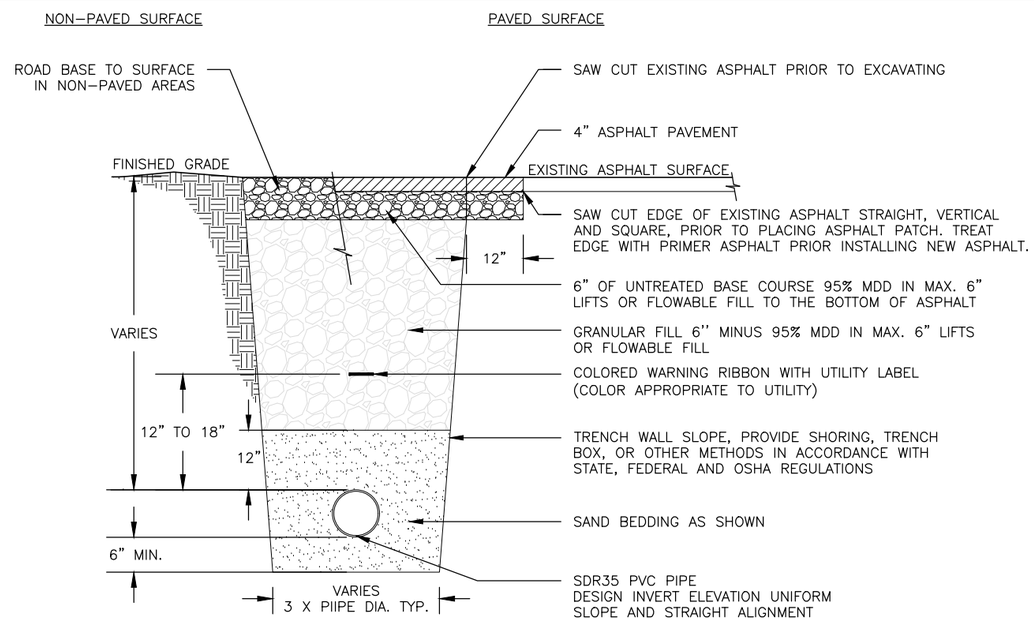

STANDARD TRENCH DETAIL

NOT TO SCALE

GENERAL SEWER UTILITY NOTES:

1. BACKFILL IN COMPACTED 6" LIFTS, FREE FROM ORGANIC MATERIAL & ROCKS LARGER THAN 6" COMPACTED TO 95% OF A T-180 UNDER TRAVELED AREAS. (NO PEA GRAVEL OR OTHER CLEAN ROCK MAY BE USED) IN NON-TRAVELED AREAS, COMPACTION MAY BE 95% OF A T-99 DENSITY WITH ± 2% OPTIMUM MOISTURE.
2. SAND APPROVED BY THE NEPHI CITY WILL BE USED FOR UTILITY LINE BEDDING, BUT MUST BE FREE OF LUMPS AND CHIPS. SAND 6" BELOW PIPE & 12" ABOVE OR AS APPROVED BY NEPHI CITY TO BE PLACED IN COMPACTED LIFTS NOT GREATER THAN 6 INCHES. COMPACTION WILL BE TO 95% OF A T-180 WITH ± 2% OPTIMUM MOISTURE OR AS APPROVED BY CITY INSPECTOR. BEDDING COMPACTION FROM THE CROWN OF THE PIPE DOWN MAY ONLY BE DONE WITH HAND-OPERATED COMPACTOR (JUMPING JACK OR PLATE COMPACTION).
3. MINIMUM GRADE FOR MAIN LINES MUST BE EQUAL TO OR GREATER THAN STATE REGULATIONS.
4. ALL SEWER SYSTEM MATERIALS ARE TO BE PRE-APPROVED BEFORE INSTALLATION.
5. GRADE FROM BUILDING TO MAIN LINES TO MEET INTERNATIONAL RESIDENTIAL CODE, OR APPROVED BY NEPHI CITY BUILDING INSPECTOR.
6. SEWER MAINS TO VIDEO TESTED AS DIRECTED BY THE CITY WATER AND SEWER SUPERINTENDENT.
7. SEWER MANHOLE BASES SHALL PROVIDE A .1' DROP DISTANCE ACROSS THE MANHOLE (MINIMUM).
8. MANHOLES SHALL HAVE A MINIMUM DEPTH OF 9'-0" UNLESS OTHERWISE APPROVED BY THE CITY.
9. SDR35 REQUIRED ON ALL NEW MAIN LINE INSTALLATION
10. ALL WORK MUST BE INSPECTED BY NEPHI CITY PRIOR TO BACKFILL

SHEET	ORIGINAL			
202	BY_____ DATE_____	SEWER DETAIL STANDARD TRENCH SEWER LATERAL	STANDARD DRAWING NEPHI CITY CORPORATION	NEPHI CITY 21 EAST 100 NORTH NEPHI, UTAH 84648
	REVISIONS			
	1 BY_____ DATE_____			
	2 BY_____ DATE_____			
	3 BY_____ DATE_____			

NEPHI CITY POLICY
CURB, GUTTER, SIDEWALK, AND DRIVE APPROACH REQUIREMENTS

9 June 2016

New Single Family Residential Construction Not In Subdivisions

It shall be the policy of Nephi City that all building permit applicants for new residential construction shall be required to curb, gutter, and sidewalk their property at the applicant's expense. The building inspector shall not issue a Certificate of Occupancy to said applicant until such time as the curb, gutter, and sidewalk have been satisfactorily constructed to city specifications, or the applicant has posted sufficient security with the city to guarantee its construction and installation within one year. The security must be an approved method similar to those set forth in Title 11, Chapter 8, Sections 4 & 5 of the Nephi City code.

Engineering and inspection will be done by Nephi City, with each building permit applicant paying an engineering fee at the time the building permit is issued. The amount of this fee will be established by the Nephi City Council. Each permit applicant will be responsible to prepare the construction pads and install curb, gutter, and sidewalk to city specifications and call for and receive approval from the city streets superintendent before and after installing concrete. Each property owner will be responsible for any earth work required to bring to grade the park strip and other areas inside the curb line and to provide driveway access until asphalt is installed.

Nephi City will prepare the area from the lip of gutter to the regularly traveled portion of the street and will install asphalt in that area as scheduling permits. Building permit applicants will pay a street improvement fee at the time the building permit is issued. The amount of this fee will be established by the Nephi City Council.

New residential construction involving large lots, which potentially have sufficient frontage for an additional building lot or lots shall be required to curb, gutter, and sidewalk

at minimum the frontage normally associated with a building lot in that zone and must enter into an agreement with the City that they will sell the remaining lot or lots within twenty-four months, and if not, agree to install the required curb, gutter, and sidewalk across the additional frontage according to the terms of this policy. Additional engineering fees may be required under this provision.

Existing Single Family Residential Properties Not in Subdivisions

Owners of existing single-family-residential properties, not in subdivisions, desiring to install curb, gutter, and sidewalk must agree to construct these improvements on at least the minimum building lot frontage for that zone and will not be allowed to leave gaps in the curb, gutter, and sidewalk that are less than the legal building lot frontage for the subject zone.

An engineering fee must be paid at the time the property owner enters into a written agreement with Nephi City governing these improvements. The amount of the fee will be established by the Nephi City Council. Engineering and inspection will be done by Nephi City.

Owners will be responsible to prepare the construction pads and install curb, gutter, and sidewalk and call for and receive an approval from the city Streets Superintendent before and after installing the concrete. Each owner will be responsible for any earth work required to bring to grade the park strip and other areas inside the curb line and to provide driveway access until asphalt is installed.

If the owner complies with the provisions of this policy and applicable City specifications, Nephi City will prepare and install asphalt in the area from the lip of gutter to the regularly traveled portion of the street, as scheduling and funding permit.

Commercial and Industrial Properties

New commercial, industrial, and residential properties that require site plan review

and are required to install curb, gutter, and sidewalk will pay an engineering fee at the time the building permit is issued. That fee will be established by the Nephi City Council. Nephi City will establish the alignment and grade for these improvements.

Pad construction, all earth work, and asphalting as required in the site plan are the responsibility of the project developer and must be completed and inspected according to Nephi City specifications, or be guaranteed by a cash bond or irrevocable letter of credit as described in Title 11, Chapter 8, Sections 4 & 5 of the Nephi City code, before an occupancy permit will be issued.

The same requirements, standards, and fees will apply to existing commercial, industrial, and residential properties for which site plan review should be required if developed today.

Sun Ridge Ranches Subdivision

For all homes constructed in this subdivision after October 19, 2004, the building permit applicant will be required to pay an associated lot fee for the previously constructed roll-through gutter across the frontage of the applicant's building lot. The fee amount has been determined by the City and will be due at the time of building permit approval.

Each permit applicant will be responsible for any earth work required to bring to grade the park strip and other areas inside the curb line.

Engineering and Street Improvement Fees

6 June 2017

New Single-Family-Residential Construction Not in Subdivisions

Engineering Fee $525.00
Street Improvement $40.00 per lineal fool of street frontage

Existing Single-Family-Residential Properties Not in Subdivisions

Engineering Fee $450.00*

Commercial and Industrial Properties

Engineering Fee $525.00*

*base fee plus surcharge for frontages exceeding 200 lineal feet, encompassing street corners, or lying outside the existing block system. The surcharge amount will be determined at site plan review.

1. Manufactured Home. A detached single-family dwelling unit that is transportable in two or more modules and is manufactured or constructed under authority of 42 United States Code, Sec. 5401, and which is built on a permanent chassis and designed to be used as a dwelling with or without a permanent foundation when connected to the required utilities and includes the plumbing, heating, air conditioning, and electrical systems contained therein. The unit must bear a U. S. Department of Housing and Urban Development (HUD) Data Plate and must not have been altered in violation of above code. Excluded from this definition shall be those permanent dwelling structures that are constructed of component parts that are transported to the building site and which meet structural requirements of the International Building Code and which are finished with exterior building material that is typical of permanent residential buildings.

2. Manufactured Home (non-conforming). A detached single-family dwelling unit that is transportable and is manufactured or constructed under authority of 42 United States Code, Sec. 5401 which does not meet the definition of a manufactured home above, and which is built on a permanent chassis and designed to be used as a dwelling with or without a permanent foundation when connected to the required utilities and includes the plumbing, heating, air conditioning, and electrical systems contained therein. The unit must bear a U. S. Department of Housing and Urban Development (HUD) Data Plate. Excluded from this definition shall be those permanent dwelling structures that are constructed of component parts that are transported to the building site and which meet structural requirements of the International Building Code and which are finished with exterior building material that is typical of permanent residential buildings.

3. Manufactured Home Subdivision. A parcel of land which has been legally subdivided where owners of manufactured homes may purchase lots and attach said mobile home to a permanent foundation. The subdivision is developed with all of the improvements and amenities found in a traditional single-family

subdivision as outlined in the Nephi City Subdivision Ordinance.

4. Mental Health Center. A publicly or privately-operated facility, intended for the diagnosis and treatment of mental or emotional disorders.

a. All applications for a building permit, except permits for re-roofing, siding, demolition, and remodeling when there is no change in structure size, must be accompanied by a plot plan drawn on a plat map available at the office of the Juab County Recorder.

b. Utility connection fees must be paid at the time the building permit is processed and issued.

c. The width of each dwelling shall not be less that twenty feet (20') at the narrowest point of its first floor exclusive of any garages, bay windows, room additions, or other similar appendages. Manufactured, modular, or mobile homes must be multiple sections, with each section having a minimum width of 10'. A basement shall not be considered as a first floor. The width shall be considered the lesser of the two primary dimensions.

d. Each dwelling shall have an engineered or code-approved, site-built, concrete or masonry permanent foundation waterproofed below ground level and sealed above ground level according to IBC. Manufactured homes must be permanently attached to the foundation according to manufacturer's installation instructions or an approved engineered foundation design. Each foundation shall have a minimum height of one foot (1') above the top back of the curb plus 2%.

e. Each dwelling unit must be taxed as real property. If it is a manufactured home, affidavits as required by Utah Code Annotated Section (56-2-602) must be filed under that section and a copy thereof submitted to the city prior to receiving a Certificate of Occupancy and within 15 days of closing.

f. Each dwelling unit shall have exterior siding material of sufficient quality, durability, and resistance to the elements to satisfy the purpose of this section. Exterior siding material shall consist of brick, stucco, glass, metal lap, vinyl lap, or stone. Wood or hardwood must be pre-approved by the city building inspector. Any other siding materials must be approved by the city building inspector.

g. The roof of all dwelling units shall have a minimum pitch of 2'6":12' (except built-up gravel see below). All units shall have eve overhangs of at least (6") excluding rain gutters, measured from the vertical side of the dwelling. The roof surface shall consist of wood shakes; asphalt, composition, or wood shingles; tile; fiberglass; concrete; built-up gravel; or metal shingles or metal roofing possessing matching ribbed or interlocking vertical side joints. Built-up gravel roofs shall have a minimum pitch of 2':12'. All units shall have a minimum roof load of 30 lb. per sq. ft.

h. Each dwelling unit that is a manufactured home must be installed by a housing set-up contractor licensed by the Utah Division of Occupational and Professional Licensing. Each unit must be installed according to the accompanying manufacturer set-up instructions, Hose bibs on manufactured homes must be of an approved, frost-proof, anti-siphon type.

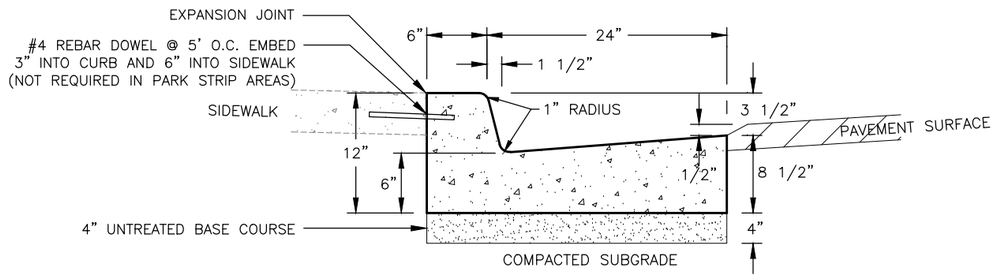

STANDARD 30" COMBINED CURB & GUTTER

NOT TO SCALE

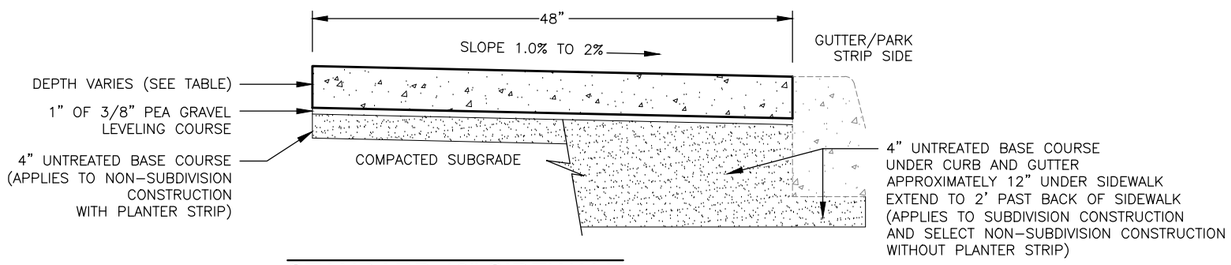

STANDARD 48" SIDEWALK

NOT TO SCALE

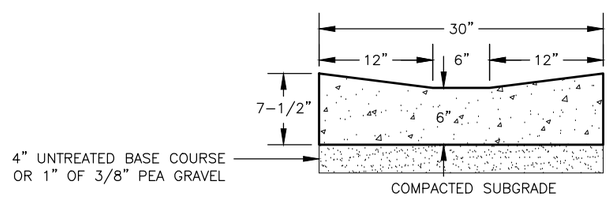

STANDARD 30" ROLL-THROUGH GUTTER

NOT TO SCALE

MINIMUM SIDEWALK THICKNESS TABLE

CONDITION	MINIMUM SIDEWALK THICKNESS
RESIDENTIAL ZONE (TYPICAL)	4"
RESIDENTIAL ZONE SIDEWALK AT DRIVEWAY APPROACH	4"
RESIDENTIAL ZONE SIDEWALK WHERE DRIVEWAY LOCATION IS UNKNOWN	4
RESIDENTIAL ZONE DRIVEWAY WITHIN PARK STRIP	4"
COMMERCIAL & INDUSTRIAL ZONE (TYPICAL)	6"
COMMERCIAL & INDUSTRIAL ZONE SIDEWALK AT DRIVEWAY APPROACH	6"

NOTES:

INSPECTION OF ALL SUB-GRADE, BASE, AND CONCRETE FORMS IS REQUIRED 24 HOURS BEFORE POURING CONCRETE. TO SCHEDULE AN INSPECTION, CONTACT NEPHI CITY STREETS SUPERINTENDENT.

SUBGRADE PREPARATION
1. GRUB ROOTS TO 12" BELOW SUBGRADE
2. CUT/FILL TO LINE AND GRADE (ALLOW FOR 4" BASE MATERIAL)
3. SCARIFY 6" DEEP AND RECOMPACT TO 95% MAX. DRY DENSITY, USE ASHTO T-180 MODIFIED PROCTOR TEST
4. COMPACT FILL TO MINIMUM OF 95% MAX. DRY DENSITY, USE ASHTO T-180 MODIFIED PROCTOR TEST

BASE PREPARATION
1. 4" MINIMUM DEPTH UNTREATED BASE COURSE WITH 1" OF 3/8" PEA GRAVEL LEVELING COURSE
2. COMPACT UNTREATED BASE COURSE TO MINIMUM OF 95% MAX. DRY DENSITY, USE ASHTO T-180 MODIFIED PROCTOR TEST
3. RAKE PEA GRAVEL TO GRADE LEVEL
4. FINISH BASE SURFACE AT OR BELOW CONCRETE LINE

CURB GUTTER REQUIREMENTS
1. MINIMUM SLOPE 0.50% UNLESS APPROVED BY NEPHI CITY
2. HORIZONTAL ALIGNMENT 1-INCH MAX. FROM TRUE LINE AT ANY LOCATION, 1/2-INCH MAX. VARIANCE IN 10-FEET
3. VERTICAL ALIGNMENT 1/2-INCH MAX FROM DESIGN GRADE AT ANY LOCATION, 1/2" MAX. VARIANCE IN 10-FEET, NO PONDING
4. CONTRACTION JOINTS AT 10"-0" O.C. MAXIMUM, DEPTH 1/4 OF CONCRETE DEPTH MINIMUM
5. 1/2-INCH MAX. RADIUS CORNERS AT LIP AND TOP BACK OF CURB, AND AT OTHER LOCATIONS EXPOSED TO VIEW

SIDEWALK REQUIREMENTS
1. MINIMUM CROSS-SLOPE 1.0% MAXIMUM CROSS-SLOPE 2.0% TOWARD GUTTER
2. CONTRACTION JOINTS AT 10'-0" O.C. MAXIMUM, DEPTH 1/4 OF CONCRETE DEPTH MINIMUM
3. EXPANSION JOINTS AT 80'-0" O.C. MAXIMUM AND AT POINTS OF CURVATURE FOR STREET CORNERS
4. MATCH EXPANSION JOINTS IN SIDEWALK WITH EXPANSION JOINTS IN CURB GUTTER
5. 1/2-INCH WIDE EXPANSION JOINT FILLER, FULL DEPTH OF CONCRETE, FLUSH WITH SURFACE
6. LONGITUDINAL JOINT REQUIRED AT CENTER (OR 10'-0" O.C. MAXIMUM) WHERE TOTAL SLAB WIDTH EXCEEDS 15-FEET
7. 1/2-INCH MAX. RADIUS CORNERS AT EDGES OF SIDEWALK AND OTHER LOCATIONS EXPOSED TO VIEW
8. FOR FLATWORK 1 POUND OF FIBER PER CUBIC YARD OF CONCRETE IS REQUIRED

ROLL-THROUGH GUTTER REQUIREMENTS
1. SLOPE 1-1/2" DOWN TO CENTER OF WATERWAY (6" DEPTH AT CENTER AND 7-1/2" DEPTH AT OUTSIDE EDGE)
2. ROLL THROUGH GUTTER SHALL ONLY BE INSTALLED WITH PERMISSION FROM NEPHI CITY
3. FOR FLATWORK 1 POUND OF FIBER PER CUBIC YARD OF CONCRETE IS REQUIRED

CONCRETE
1. MINIMUM CEMENT CONTENT 7 BAGS PER CUBIC YARD
2. DESIGN 28-DAY COMPRESSIVE STRENGTH 4500 PSI
3. AIR CONTENT 6% ± 1.0%
4. SLUMP 4 1/2-INCH MAXIMUM
5. TESTING
   TOTAL POUR LESS THAN 5 CUBIC YARDS OR LESS – NO TEST REQUIRED
   TOTAL POUR 5 CUBIC YARDS OR MORE – 1 TEST PER 50 CUBIC YARDS (OR FRACTION THEREOF)
      COMPRESSIVE STRENGTH (3 CYLINDERS PER TEST)
      AIR
      SLUMP
6. BROOM FINISH
7. CURE AND SEAL WITH PRODUCT MEETING ASTM C-1315, TYPE 1, CLASS A.

SLIP FORMING
1. SLIP FORMS MUST PRODUCE REQUIRED CROSS-SECTION, GRADE, JOINTS AND FINISH AS SPECIFIED FOR FORMED CONCRETE

SHEET	ORIGINAL			
401	BY_____ DATE_____	30" CURB & GUTTER 48" SIDEWALK & ROLL-THROUGH GUTTER	STANDARD DRAWING NEPHI CITY CORPORATION	NEPHI CITY 21 EAST 100 NORTH NEPHI, UTAH 84648
	REVISIONS			
	1 BY_____ DATE_____			
	2 BY_____ DATE_____			
	3 BY_____ DATE_____			

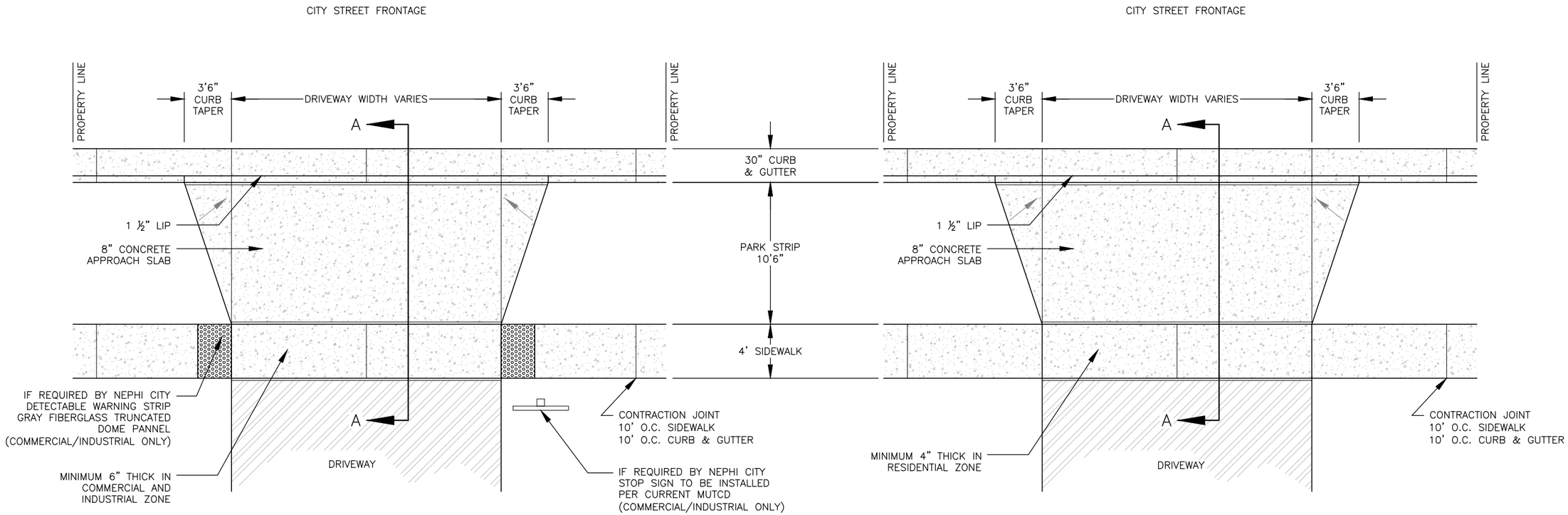

DRIVE APPROACH (COMMERCIAL/INDUSTRIAL)

NOT TO SCALE

DRIVE APPROACH (RESIDENTIAL)

NOT TO SCALE

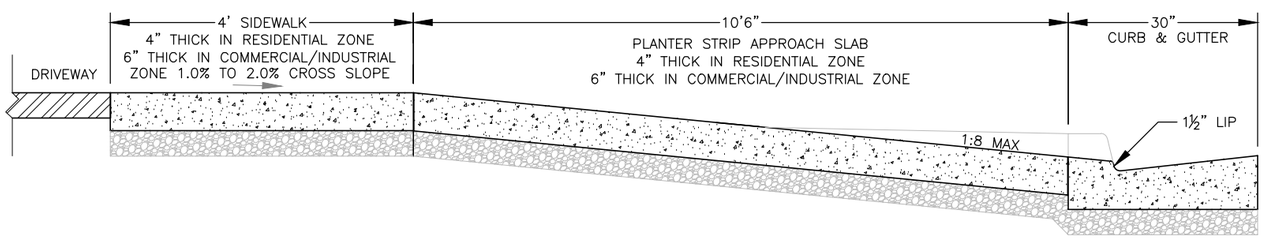

SECTION VIEW A-A (WITH PARK STRIP)

NOT TO SCALE

NOTES:

1. SEE SHEET 401 STANDARD CURB & GUTTER DETAIL
2. SEE SHEET 401 STANDARD SIDEWALK DETAIL
3. SEE SHEET 401 NOTES FOR SUB-GRADE, BASE, AND CONCRETE REQUIREMENTS
4. STOP SIGN MUST BE INSTALLED PER MUTCD, LATEST EDITION
5. DETECTABLE WARNING (TRUNCATED DOME) PANELS REQUIRED IF STOP SIGN REQUIRED
6. TRUNCATED DOME PANELS TO BE GRAY FIBERGLASS
7. CURB, GUTTER AND SIDEWALK TO EXTEND ALONG ALL PROPERTY LINES ADJACENT TO CITY STREET FRONTAGE
8. SIDEWALK MUST BE WITHIN DEDICATED RIGHT-OF-WAY

SHEET	ORIGINAL			
402	BY_____ DATE_____	DRIVE APPROACH WITH PARK STRIP	STANDARD DRAWING NEPHI CITY CORPORATION	NEPHI CITY
	REVISIONS			21 EAST 100 NORTH NEPHI, UTAH 84648
	1 BY_____ DATE_____			
	2 BY_____ DATE_____			
	3 BY_____ DATE_____			

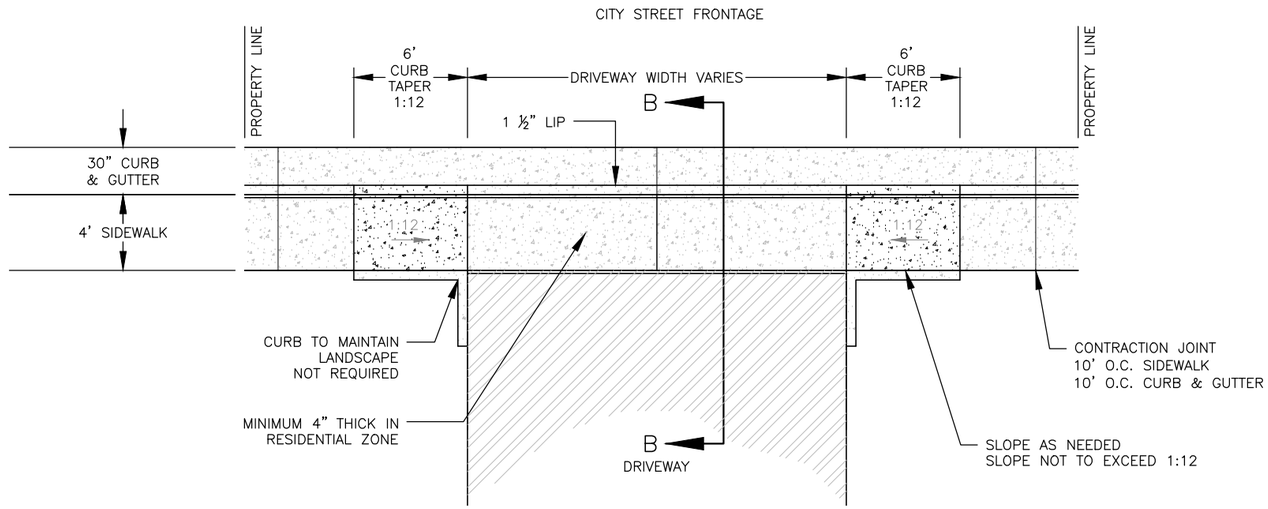

DRIVE APPROACH (RESIDENTIAL ONLY)

NOT TO SCALE

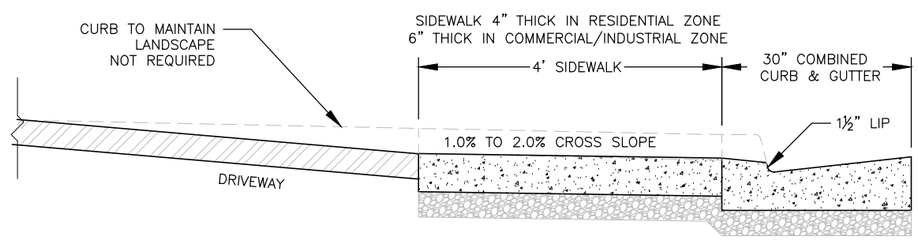

SECTION VIEW B-B (NO PARK STRIP)

NOT TO SCALE

NOTES:

1. SEE SHEET 401 STANDARD CURB & GUTTER DETAIL
2. SEE SHEET 401 STANDARD SIDEWALK DETAIL
3. SEE SHEET 401 NOTES FOR SUB-GRADE, BASE, AND CONCRETE REQUIREMENTS
4. STOP SIGN MUST BE INSTALLED PER MUTCD, LATEST EDITION
5. DETECTABLE WARNING (TRUNCATED DOME) PANELS REQUIRED IF STOP SIGN REQUIRED
6. TRUNCATED DOME PANELS TO BE GRAY FIBERGLASS
7. CURB, GUTTER AND SIDEWALK TO EXTEND ALONG ALL PROPERTY LINES ADJACENT TO CITY STREET FRONTAGE
8. SIDEWALK MUST BE WITHIN DEDICATED RIGHT-OF-WAY

SHEET	ORIGINAL			
403	BY_____ DATE_____	DRIVE APPROACH NO PARK STRIP	STANDARD DRAWING NEPHI CITY CORPORATION	NEPHI CITY
	REVISIONS			21 EAST 100 NORTH NEPHI, UTAH 84648
	1 BY_____ DATE_____			
	2 BY_____ DATE_____			
	3 BY_____ DATE_____			

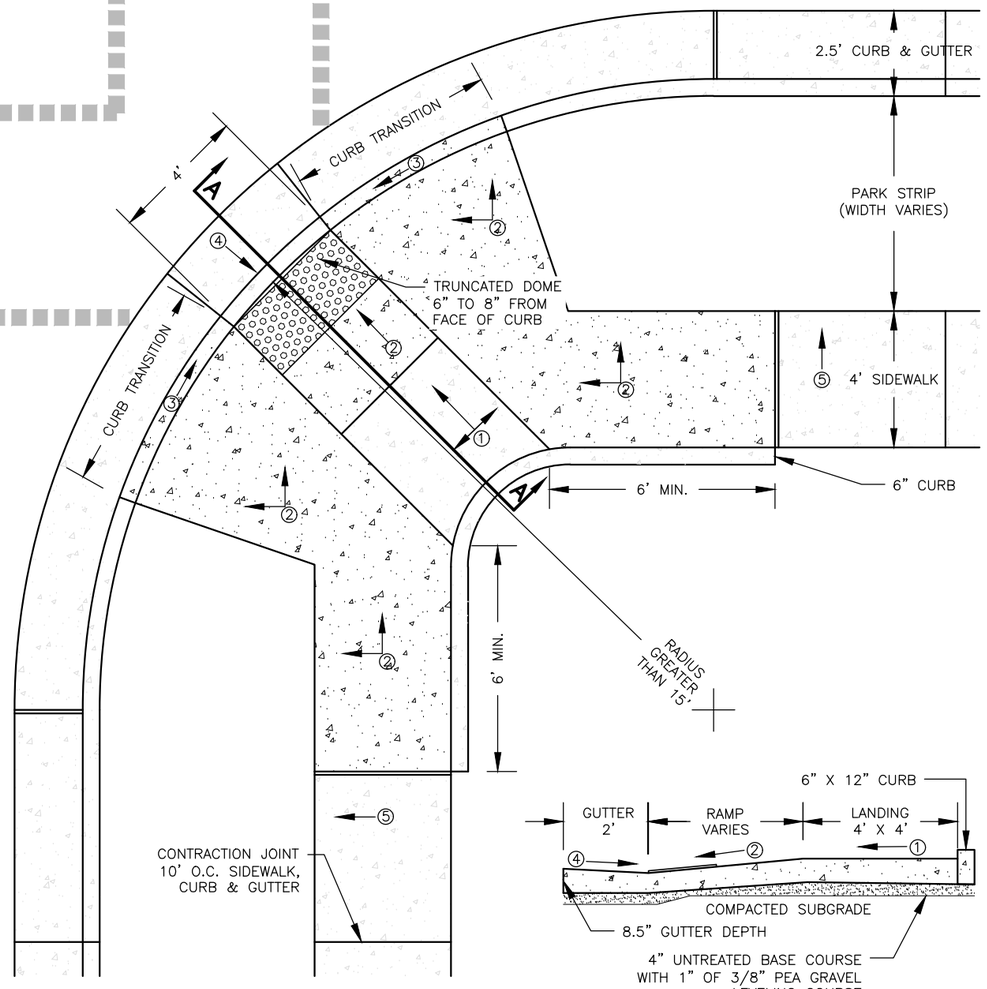

ADA CORNER RAMP (WITH PARK STRIP)

NOT TO SCALE

SECTION A-A

ALL RAMP ARRANGEMENTS MUST BE APPROVED BY NEPHI CITY BEFORE CONSTRUCTION

SLOPE TABLE

	ITEM	MAX. RUNNING SLOPE*	MAX. CROSS SLOPE**
①	LANDING	2% (1V:50H)	2% (1V:50H)
②	RAMP	8.33% (1V:12H)	2% (1V:50H)
③	CURB TRANSITION	8.33% (1V:12H)	2% (1V:50H)
④	GUTTER TRANSITION ***	5% (1V:20H)	2% (1V:50H)
⑤	SIDEWALK	———	2% (1V:50H)
⑥	FLARE	10% (1V:10H)	———

* RUNNING SLOPE IS IN THE DIRECTION OF PEDESTRIAN TRAVEL
** CROSS SLOPE IS PERPENDICULAR TO PEDESTRIAN TRAVEL
*** NO LIP AT CURB LINE BETWEEN CURB AND GUTTER TRANSITION

NOTES:

INSPECTION OF ALL SUB-GRADE, BASE, AND CONCRETE FORMS IS REQUIRED 24 HOURS BEFORE POURING CONCRETE. TO SCHEDULE AN INSPECTION, CONTACT NEPHI CITY STREETS SUPERINTENDENT.

1. CONTRACTOR SHALL CONFORM WITH CURRENT LOCAL & FEDERAL ADA GUIDELINES
2. TRUNCATED DOME PANELS SHALL BE SET IN CONCRETE DURING CASTING
3. TRUNCATED DOME PANELS SHALL BE GRAY FIBERGLASS 2' x 4'
4. PROVIDE DETECTABLE WARNING SURFACE FOR FULL WIDTH OF RAMP, LANDING, OR CURB CUT
5. STORM DRAIN INLET BOXES SHALL NOT BE LOCATED WITHIN ADA RAMP AREA
6. SIDEWALK AND CURB GUTTER SHALL NOT BE MONOLITHIC
7. EXPANSION JOINT REQUIRED ALONG BACK OF CURB WHEN ADJACENT TO CONCRETE
8. NO LIP AT FLOWLINE WHERE GUTTER CROSSES RAMP
9. SEE CURB GUTTER AND SIDEWALK DETAILS FOR ADDITIONAL REQUIREMENTS
10. CONCRETE THICKNESS MUST BE 6" FOR ALL RAMPS AND LANDINGS

SHEET 409

ORIGINAL
BY_____ DATE_____

REVISIONS
1 BY_____ DATE_____
2 BY_____ DATE_____
3 BY_____ DATE_____

ADA CORNER RAMP
RADIUS GREATER THAN 15'
WITH AND WITHOUT PARKSTRIP

STANDARD DRAWING
NEPHI CITY CORPORATION

NEPHI CITY
21 EAST 100 NORTH
NEPHI, UTAH 84648